TMP006/B Infrared Thermopile Sensor in Chip-Scale Package

1 Features

- Integrated MEMs Thermopile for Noncontact Temperature Sensing
- Local Temperature Sensor for Cold Junction Reference
  - ±1°C (max) from 0°C to 60°C
  - ±1.5°C (max) from –40°C to +125°C
- Two-Wire Serial Interface Options:
  - I^2C and SMBus Compatible
    - TMP006 at 3.3 V
    - TMP006B at 1.8 V
  - Eight Programmable Addresses
- Low Power
  - Supply: 2.2 V to 5.5 V
  - Active Current: 240 µA (typ)
  - 1-µA shutdown (max)
- Compact Package
  - 1.6-mm × 1.6-mm × 0.625-mm DSBGA

2 Applications

- Noncontact Temperature Sensing
  - Case Temperature
  - Laser Printers
  - Power Relays
  - Health and Beauty
  - HVAC Comfort Optimization
- Gas Concentration
- Flame Detection

3 Description

The TMP006 and TMP006B are fully integrated MEMs thermopile sensors that measure the temperature of an object without having to be in direct contact. The thermopile absorbs passive infrared energy from an object at wavelengths between 4 um to 16 um within the end-user defined field of view.

The corresponding change in voltage across the thermopile is digitized and reported with the on-chip die thermal sensor measurement through an I^2C- and SMBus-compatible interface. With this data, the target object temperature can be calculated by an external processor.

The TMP007 is an enhanced version of the TMP006 or TMP006B. The TMP007 combines all the features of the TMP006 and TMP006B with an additional math engine to perform all of the equations on chip, allowing the target object temperature to be read directly from the device. The TMP007 also provides built-in nonvolatile memory for storing calibration coefficients.

The Infrared thermopile sensor is specified to operate from –40°C to +125°C. It is possible to measure an object temperature beyond the device operating range as long as the device itself does not exceed the operating temperature range (–40°C to +125°C).

Device Information(1)

PART NUMBER	PACKAGE	BODY SIZE (NOM)
TMP006	DSBGA (8)	1.60 mm × 1.60 mm
TMP006B		

(1) For all available packages, see the package option addendum at the end of the datasheet.

Simplified Schematic

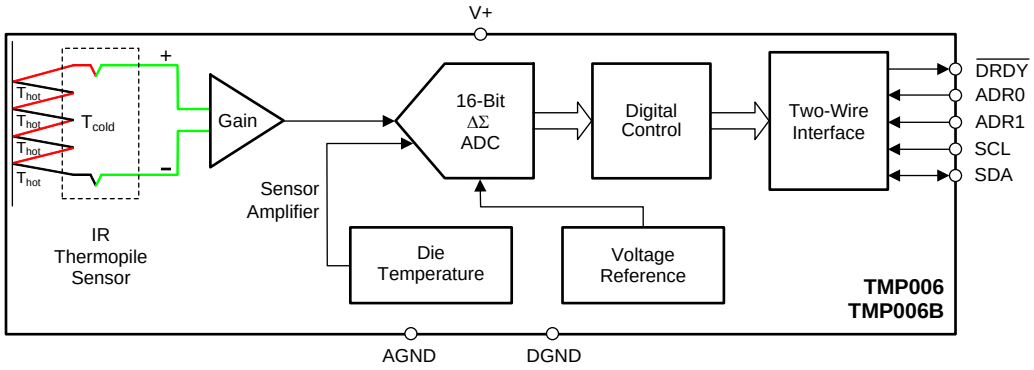

An IMPORTANT NOTICE at the end of this data sheet addresses availability, warranty, changes, use in safety-critical applications, intellectual property matters and other important disclaimers. PRODUCTION DATA.

Table of Contents

1 **Features** ... 1
2 **Applications** ... 1
3 **Description** ... 1
4 **Revision History** ... 2
5 **Device Comparison Table** ... 4
6 **Pin Configuration and Functions** ... 4
7 **Specifications** ... 5
7.1 Absolute Maximum Ratings ... 5
7.2 ESD Ratings ... 5
7.3 Recommended Operating Conditions ... 5
7.4 Thermal Information ... 5
7.5 Electrical Characteristics ... 6
7.6 Typical Characteristics ... 7
8 **Detailed Description** ... 8
8.1 Overview ... 8
8.2 Functional Block Diagram ... 8
8.3 Feature Description ... 8
8.4 Device Functional Modes ... 19
8.5 Register Maps ... 19
9 **Application and Implementation** ... 21
9.1 Application Information ... 21
9.2 Typical Application ... 21
9.3 System Examples ... 24
10 **Power-Supply Recommendations** ... 26
11 **Layout** ... 27
11.1 Layout Guidelines ... 27
11.2 Layout Examples ... 28
12 **Device and Documentation Support** ... 31
12.1 Device Support ... 31
12.2 Documentation Support ... 31
12.3 Related Links ... 31
12.4 Trademarks ... 31
12.5 Electrostatic Discharge Caution ... 31
12.6 Glossary ... 31
13 **Mechanical, Packaging, and Orderable Information** ... 32

4 Revision History

NOTE: Page numbers for previous revisions may differ from page numbers in the current version.

Changes from Revision D (November 2014) to Revision E	Page
• Changed *Feature*, *Applications*, and *Description* sections	1
• Changed thermopile sensor portion of simplified schematic	1
• Changed operating range minimum value in Absolute Maximum Ratings from –55°C to –40°C	5
• Changed Handling Ratings to ESD Ratings and moved storage temperature to Absolute Maximum Ratings	5
• Changed Figure 3	7
• Changed thermopile sensor portion of functional block diagram	8
• Deleted text at the end of 2nd paragraph in *Field of View and Angular Response* section	10
• Added Figure 8	10
• Changed T_{REG} to T_{DIE} in *Temperature Format* section	15

Changes from Revision C (December 2012) to Revision D	Page
• Changed all instances of WCSP to DSBGA throughout data sheet	1
• Changed document format to latest data sheet standards	1
• Added *Device Comparison*, *Handling Rating*, and *Recommended Operating Conditions* tables, and *Feature Description*, *Device Functional Modes*, *Register Maps*, *Application and Implementation*, *Power Supply Recommendations*, *Layout*, *Device and Documentation Support*, and *Mechanical, Packaging, and Orderable Information* sections	1
• Changed text in first paragraph of *Description* section	1
• Changed all instances of "local temperature" to "die temperature" throughout data sheet	1
• Moved histogram from page 1 to *Typical Characteristics* section	1
• Added Simplified Schematic title to front-page figure	1
• Changed simplified schematic	1
• Deleted Package Information table	4
• Changed all T_{Object} to T_{OBJ} throughout data sheet	6
• Changed x- and y-axis labels in Figure 1	7

Copyright © 2011–2015, Texas Instruments Incorporated

- Changed text related to object temperature measurement in first paragraph of *Overview* section 8
- Changed Table 3 15
- Changed all V_{OBJECT} to V_{SENSOR} throughout datasheet 19
- Deleted *Pointer Register* section 19
- Changed Sensor Voltage Register name to Sensor Voltage Result Register 19
- Changed $T_{AMBIENT}$ to T_{DIE} throughout data sheet 19

Changes from Revision B (February 2012) to Revision C **Page**

- Added TMP006B device to data sheet 1
- Changed Package Information table to include new TMP006B device with the TMP006, and show the different voltage for the two devices 4

Changes from Revision A (July 2011) to Revision B **Page**

- Changed Output Error, *Calculate object temperature* parameter test conditions in Electrical Characteristics table 6
- Changed description of device ID to 0067h in *Manufacturer and Device ID Registers* section 20
- Changed FFh, *Reset value* bits D2, D1, and D0 values in Figure 18 20
- Changed Figure 23 28
- Changed Figure 24 29
- Changed Figure 25 30

Changes from Original (May, 2011) to Revision A **Page**

- Added specifications for *ambient temperature sensor* parameter over 0°C to +60°C 6
- Revised Table 4 16

5 Device Comparison Table

PRODUCT	TWO-WIRE INTERFACE VOLTAGE
TMP006	3.3 V
TMP006B	1.8 V

6 Pin Configuration and Functions

YZF Package
8-Pin DSBGA
(Top View, Not to Scale)

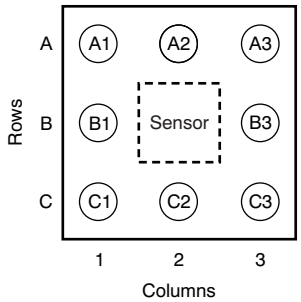

Pin Functions

PIN		I/O	DESCRIPTION
NAME	NO.		
ADR0	C1	Input	Address select pin
ADR1	B1	Input	Address select pin
AGND	A2	Power	Analog ground
DGND	A1	Power	Digital ground
$\overline{\text{DRDY}}$	C2	Output	Data ready, active low, open-drain; requires a pullup resistor to V+.
SCL	B3	Input	Serial clock line for two-wire interface, open-drain; requires a pullup resistor to V+.
SDA	C3	Input/output	Serial data line for two-wire interface, open-drain; requires a pullup resistor to V+.
V+	A3	Power	Positive supply (2.2 V to 5.5 V)

Copyright © 2011–2015, Texas Instruments Incorporated

7 Specifications

7.1 Absolute Maximum Ratings

over operating free-air temperature range (unless otherwise noted)[1]

		MIN	MAX	UNIT
Supply voltage, V_S	V+ pin		7	V
Input voltage	ADR1 pins	–0.5	V_S + 0.5	V
	SDA, SCL, $\overline{DRDY}$, ADR0 pins	–0.5	+7	V
Input current			10	mA
Temperature	Operating range	–40	+125	°C
	Junction temperature, $T_{J\ max}$		+150	°C
	Storage range, T_{stg}	–65	+150	°C

(1) Stresses beyond those listed under *Absolute Maximum Ratings* may cause permanent damage to the device. These are stress ratings only, which do not imply functional operation of the device at these or any other conditions beyond those indicated under *Recommended Operating Conditions*. Exposure to absolute-maximum-rated conditions for extended periods may affect device reliability.

7.2 ESD Ratings

		VALUE	UNIT
$V_{(ESD)}$ Electrostatic discharge	Human-body model (HBM), per ANSI/ESDA/JEDEC JS-001[1]	±2000	V
	Charged-device model (CDM), per JEDEC specification JESD22-C101[2]	±500	
	Machine model	±200	

(1) JEDEC document JEP155 states that 500-V HBM allows safe manufacturing with a standard ESD control process.
(2) JEDEC document JEP157 states that 250-V CDM allows safe manufacturing with a standard ESD control process.

7.3 Recommended Operating Conditions

over operating free-air temperature range (unless otherwise noted)

	MIN	NOM	MAX	UNIT
Supply voltage, V_S	2.5	3.3	5.5	V
Operating temperature range	–40		+125	°C
Die temperature, T_{DIE}			125	°C
Object temperature, T_{OBJ}	See note [1]			°C

(1) Object temperature is application dependent.

7.4 Thermal Information

THERMAL METRIC[1]		TMP006 TMP006B YZF (DSBGA) 8 PINS	UNIT
$R_{\theta JA}$	Junction-to-ambient thermal resistance	123.8	°C/W
$R_{\theta JC(top)}$	Junction-to-case (top) thermal resistance	69	
$R_{\theta JB}$	Junction-to-board thermal resistance	103	
ψ_{JT}	Junction-to-top characterization parameter	4.7	
ψ_{JB}	Junction-to-board characterization parameter	55	
$R_{\theta JC(bot)}$	Junction-to-case (bottom) thermal resistance	N/A	

(1) For more information about traditional and new thermal metrics, see the *IC Package Thermal Metrics* application report, SPRA953.

Copyright © 2011–2015, Texas Instruments Incorporated

7.5 Electrical Characteristics

At T_{DIE} = +25°C, V+ = 3.3 V, and conversion time = 1 second, unless otherwise specified.

PARAMETER		TEST CONDITIONS	MIN	TYP	MAX	UNIT
OUTPUT ERROR						
	Die temperature sensor	T_{DIE} = 0°C to +60°C, V+ = 2.2 V to 5.5 V		±0.5	±1	°C
		T_{DIE} = –40°C to +125°C, V+ = 2.2 V to 5.5 V		±0.5	±1.5	°C
PSRR	Power-supply rejection ratio			0.1		°C/V
	Calculate object temperature(1)	T_{DIE} = +20°C to +60°C, $T_{OBJ} – T_{DIE}$ = –10°C to +30°C		±1	±3	°C
	Field of view	50% responsivity		90		Degrees
TEMPERATURE MEASUREMENT						
	Conversion time	CR2 = 0, CR1 = 0, CR0 = 0		0.25		Seconds
		CR2 = 0, CR1 = 0, CR0 = 1		0.5		Seconds
		CR2 = 0, CR1 = 1, CR0 = 0		1		Seconds
		CR2 = 0, CR1 = 1, CR0 = 1		2		Seconds
		CR2 = 1, CR1 = 0, CR0 = 0		4		Seconds
	Resolution	Die temperature sensor		0.03125		°C
		Thermopile sensor resolution		156.25		nV
SMBus COMPATIBLE INTERFACE						
V_{IH}	Logic input high voltage (SCL, SDA)	TMP006 only	2.1			V
		TMP006B only	1.4			V
V_{IL}	Logic input low voltage (SCL, SDA)	TMP006 only			0.8	V
		TMP006B only			0.4	V
	Hysteresis			100		mV
V_{OL}	Output low voltage (SDA)	I_{OUT} = 6 mA		0.15	0.4	V
	Output low sink current (SDA)		6			mA
	Logic input current	Forced to 0.4 V	–1		+1	µA
	Input capacitance (SCL, SDA, A0, A1)			3		pF
	Clock frequency		0.001		3.4	MHz
	Interface timeout		25	30	35	ms
DIGITAL OUTPUTS						
V_{OL}	Output low voltage ($\overline{DRDY}$)	I_{OUT} = 4 mA		0.15	0.4	V
I_{OH}	High-level output leakage current	$V_{OUT} = V_{DD}$		0.1	1	µA
	Output low sink current ($\overline{DRDY}$)	Forced to 0.4 V	4			mA
POWER SUPPLY						
V_S	Specified voltage range	T_{DIE} = –40°C to +125°C	2.2		5.5	V
POR	Power-on reset	T_{DIE} = –40°C to +125°C		1.6		V
I_Q	Quiescent current	Continuous conversion; see Table 7		240	325	µA
		Serial bus inactive, shutdown mode, TMP006 only		0.5	1.0	µA
		Serial bus inactive, shutdown mode, TMP006B only		1.5	5.0	µA
		Serial bus active, f_S = 400 kHz, shutdown mode		90		µA

(1) This parameter is tested in a fully-settled setup with no transients, in front of an ideal black body, with specified layout constraints, and after system calibration.

Copyright © 2011–2015, Texas Instruments Incorporated

7.6 Typical Characteristics

At T_{DIE} = +25°C and V_S = 3.3 V, unless otherwise noted.

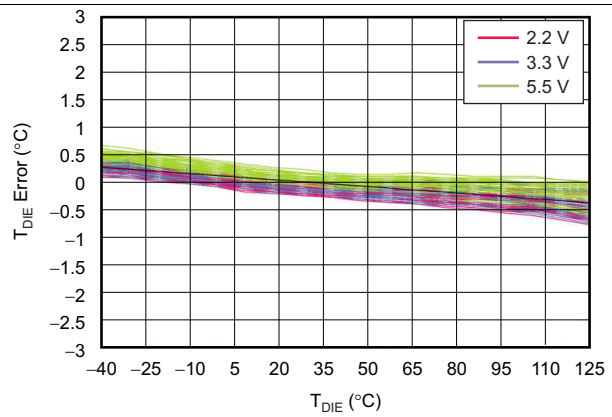

Figure 1. Typical Die Temperature Error

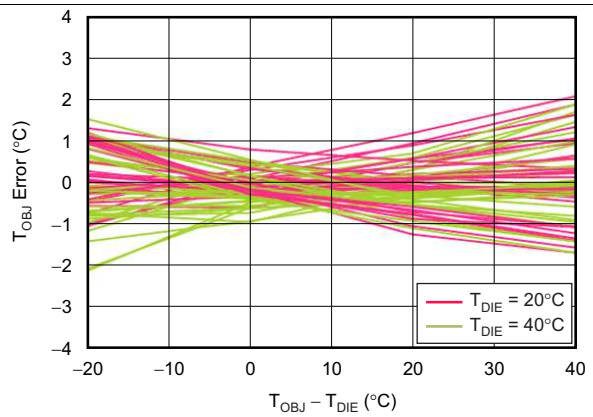

Figure 2. Typical Object Temperature Error

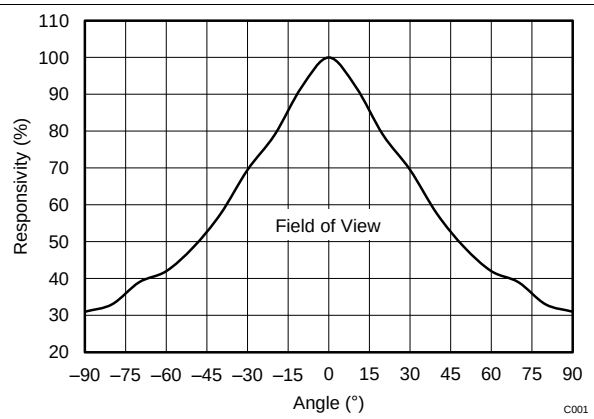

Figure 3. Responsivity vs Angle

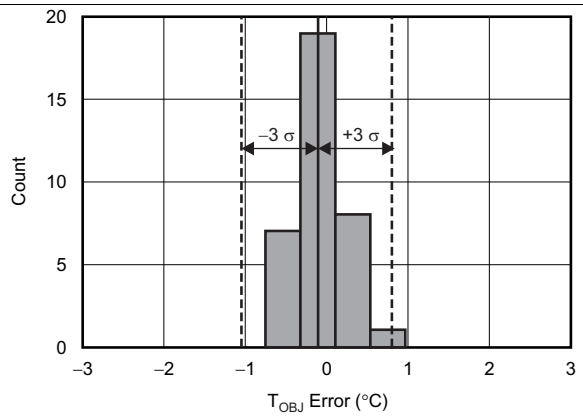

T_{OBJ} = 20°C, T_{DIE} = 20°C,
valid for 120° FOV and object emissivity = 0.94

Figure 4. Noise-Limited, Object-Temperature Accuracy

8 Detailed Description

8.1 Overview

The TMP006 and TMP006B are digital temperature sensors that are optimal for thermal management and thermal protection applications where remote noncontact sensing is desired. The TMP006 and TMP006B use a two-wire interface (I^2C and SMBus compatible), and are specified over the die temperature range of –40°C to +125°C. The TMP006 and TMP006B measure object temperatures over a range limited only by the maximum sensor voltage (5.12 mV). The TMP006 and TMP006B contain registers for holding configuration information, temperature measurement results, and sensor voltage measurement. Die temperature and sensor voltage measurements are used to calculate the object temperature.

The TMP006 and TMP006B provide both die temperature and thermopile sensor voltage outputs in a small DSBGA chip-scale package. The die temperature sensor in both the TMP006 and TMP006B is integrated on-chip; the thermal path runs through the DSBGA solder balls. The low thermal resistance of the solder balls provides the thermal path to maintain the chip at the temperature of the die environment.

The top side of the DSBGA package must face the object that is being measured with an unobstructed view in order to accurately measure the temperature. Refer to the user guide *TMP006 Layout and Assembly Guidelines (SBOU108)* for more details.

8.2 Functional Block Diagram

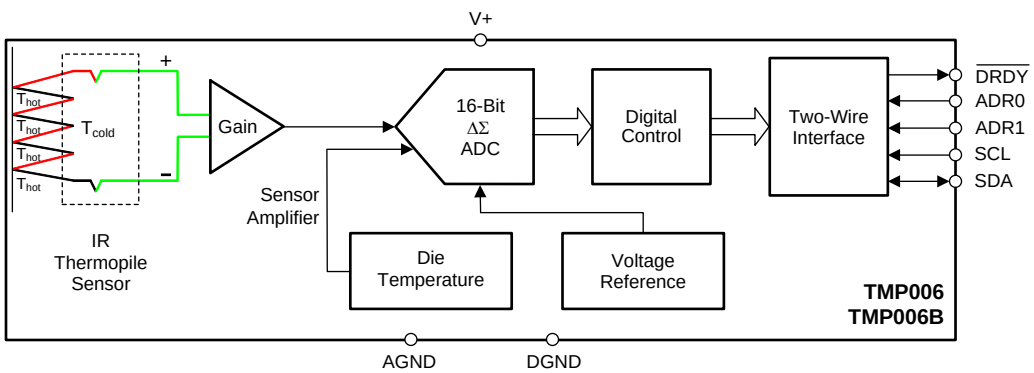

8.3 Feature Description

The TMP006 and TMP006B sense the IR radiation emitted by all objects. The spectrum of the radiation depends only on the temperature and is given by Planck's law, as shown in Equation 1:

$$B_\lambda(T,\lambda) = \frac{2hc^2}{\lambda^5}\left(\frac{1}{e^{\frac{hc}{\lambda k_B T}} - 1}\right) \text{watts / cm}^2 \text{ / } \mu\text{m} \quad (1)$$

where

- h = Planck's constant
- c = speed of light
- k_B = Boltzmann's constant
- λ = wavelength in microns

Copyright © 2011–2015, Texas Instruments Incorporated

Feature Description (continued)

The intensity of radiation from the object is determined by the emisivity (ε), a material-dependent property that scales the spectral response so that 0 < ε < 1. For an ideal black body, the radiation is at a maximum for a given temperature and ε = 1. The temperature is measured on the kelvin scale where 0 K is absolute zero, or –273.15°C. Room temperature (25°C) is approximately 298.13 K. The emission spectra for objects at or near room temperature are shown in Figure 5. For these temperatures, the majority of the radiation emitted is in the wavelength range of 3 µm to 20 µm.

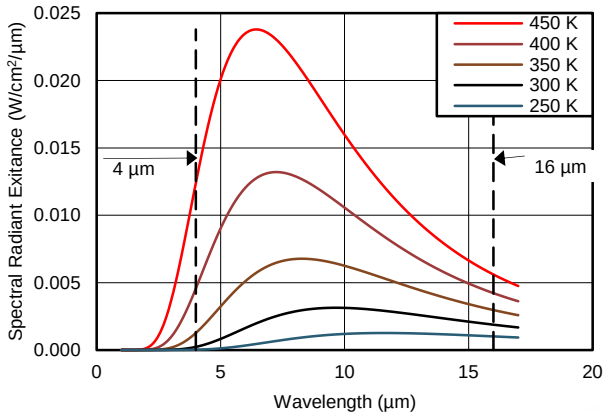

Figure 5. Black Body Emission Spectrum and Response

8.3.1 Spectral Responsivity

The TMP006 and TMP006B are optimized to sense IR radiation emitted by objects from approximately 250 K (–23°C) to 400 K (127°C), with maximum sensitivity from approximately 4 µm to 16 µm. The relative spectral response of the TMP006 and TMP006B is shown in Figure 6.

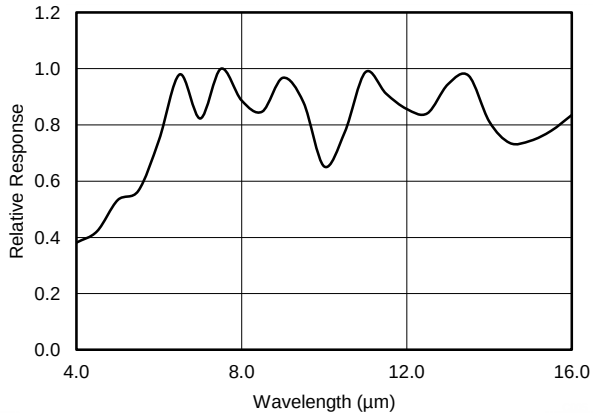

Figure 6. Relative Spectral Response vs Wavelength

Feature Description (continued)

8.3.2 Field of View and Angular Response

The TMP006 and TMP006B sense all radiation within a defined field of view (FOV). The FOV (or full-angle of θ) is defined as 2Φ. These devices contain no optical elements, and thus sense all radiation within the hemisphere to the front of the device. Figure 3 shows the angular dependence of the sensor response and the relative power for a circular object that subtends a half angle of phi (Φ). Figure 7 defines the angle Φ in terms of object diameter and distance. Figure 7 assumes that the object is well approximated as a plane that is perpendicular to the sensor axis.

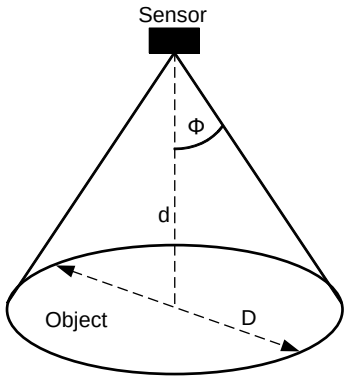

Figure 7. FOV Geometry Definition

In this case, the maximum contribution is from the portion of the object directly in front of the TMP006 or TMP006B (Φ = 0); with the sensitivity per solid angle, dR/dΦ decreases as Φ increases. Approximately 50% of the energy sensed by the TMP006 and TMP006B is within a FOV (θ) = 90°.

This discussion is for illustrative purposes only; in practice the angular response (dR/dΦ) of the TMP006 and TMP006B to the object is affected by the object orientation, the number of objects, and the precise placement relative to the TMP006 or TMP006B. Figure 8 shows the thermopile sensor dimensions.

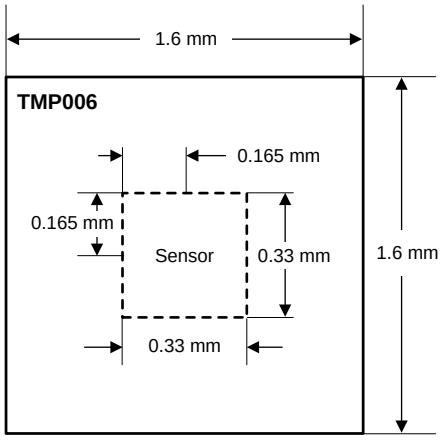

NOTE: Thermopile sensor is centered in the device.

Figure 8. Thermopile Sensor Dimensions

Copyright © 2011–2015, Texas Instruments Incorporated

Feature Description (continued)

8.3.3 Thermopile Principles and Operation

The TMP006 and TMP006B sense radiation by absorbing the radiation on a hot junction. The thermopile then generates a voltage proportional to the temperature difference between the hot junction, T_{hot}, and the cold junction, T_{cold}.

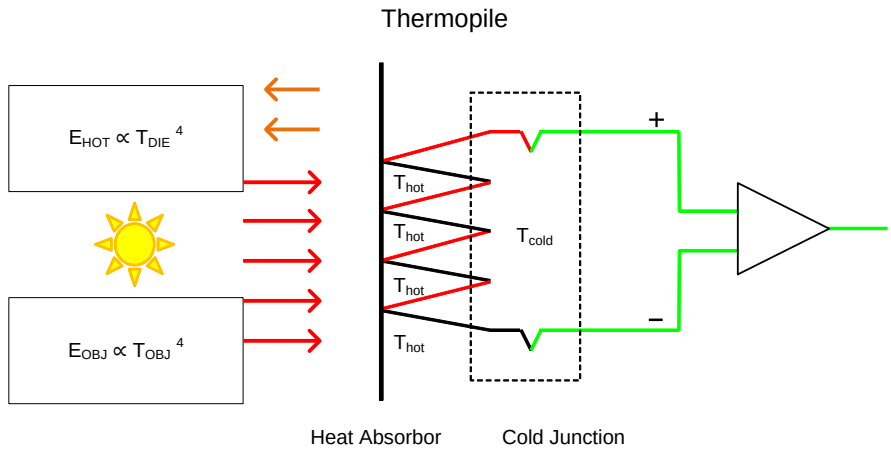

Figure 9. Principle of Thermopile Operation

The cold junction is thermally grounded to the die, and is effectively T_{DIE}, the die temperature. In thermal equilibrium, the hot junction is determined by the object temperature, T_{OBJ}. The energy emitted by the object, E_{OBJ}, minus the energy radiated by the die, E_{DIE}, determines the temperature of the hot junction. The output voltage, V_{OUT}, is therefore determined by the relationship shown in Equation 2:

$$V_{OUT} = V_{SENSOR} = C \times (T_{HOT} - T_{COLD}) \propto (T_{OBJ}4 - T_{DIE}4)$$

where

- C is a constant depending on the design of the sensing element. (2)

Note that the sensor voltage is related to both the object temperature and the die temperature. A fundamental characteristic of all thermopiles is that they measure temperature *differentials*, not *absolute* temperatures. The TMP006 and TMP006B contain a highly-accurate, internal temperature sensing element to measure T_{DIE}. Estimate T_{OBJ} by using V_{SENSOR} and T_{DIE}. For each 250-ms conversion cycle, the TMP006 and TMP006B measure a value for V_{SENSOR} and for T_{DIE}, which are then placed in their respective registers.

For each conversion cycle, the device generates an analog-to-digital converter (ADC) value for T_{DIE} and V_{SENSOR}. Bits CR2 to CR0 determine the number of T_{DIE} and sensor ADC results to average before they are loaded into the respective registers for readout.

After power-on reset (POR), the TMP006 and TMP006B start in four conversions per second (CR[2:0] = 010). In general, for a mode with *N* conversions, the local temperature, T_{DIE}, result is updated at the end of the *Nth* ADC conversion with the value shown in Equation 3:

$$T_{DIE} = \frac{1}{N}\sum_{X=1}^{N} \text{Local Temp Conversion}_X \tag{3}$$

Similarly, the sensor voltage result is updated at the end of the *Nth* sensor ADC conversion with the value shown in Equation 4:

$$V_{SENSOR} = \frac{1}{N}\sum_{X=1}^{N} \text{Sensor Conversion}_X \tag{4}$$

The total conversion time and averages per conversion can be optimized to select the best combination of update rate versus noise for an application. Additionally, low-power conversion mode is available. In CR settings 101, 110, and 111, the device inserts a standby time before the beginning of the next conversion or conversions.

The method and requirements for estimating T_{OBJ} are described in the next section.

Feature Description (continued)

8.3.4 Object Temperature Calculation

The TMP006 and TMP006B generate a sensor voltage, V_{Sensor}, in register 00h that is representative of the energy radiated by the object. In an ideal situation, the Stefan-Boltzman law relates the energy radiated by an object to its temperature by the relationship shown in Equation 5:

$$Energy_{Rad} = \varepsilon\sigma T_{OBJ}^4$$

where

- σ = Stefan-Boltzman constant = 5.7×10^{-12} W/cm^2/K^4
- ε = Emissivity, 0 < ε < 1, an object dependent factor, ε = 1 for a perfect black body (5)

A similar relationship holds for the sensing element itself that radiates heat at a rate determined by T_{DIE}. The net energy absorbed by the sensor is then given by the energy absorbed from the object minus the energy radiated by the sensor, as shown in Equation 6:

$$V_{SENSOR} \propto E_{ABSORBED} - E_{RADIATED} = \varepsilon\sigma\left(T_{OBJ}^4 - T_{DIE}^4\right) \tag{6}$$

In an ideal situation, the sensor voltage relates to object temperature as shown in Equation 7:

$$T_{OBJ} = \sqrt[4]{T_{DIE}^4 + \frac{V_{SENSOR}}{\varepsilon\sigma}} \tag{7}$$

$$T_{OBJ} = \sqrt[4]{T_{DIE}^4 + \left(\frac{f\{V_{OBJ}\}}{S}\right)}$$

where

- S is a system-dependent parameter incorporating the object emissivity (ε), FOV, and sensor characteristics. The parameters S0, A1, and A2 are used in determining S.
- $f(V_{OBJ})$ is a function that compensates for heat flow other than radiation, such as convection and conduction, from nearby objects. The parameters B0, B1, and B2 are used to tune this function to a particular system and environment. (8)

The coefficients affect object temperature measurement as described in Table 1.

Table 1. Calibration Coefficient Definitions

COEFFICIENT	PURPOSE	CALIBRATION	COMMENT
S0	FOV and emissivity of object	Application and object dependent	Default values based on black body with ε = 0.95, and 110° FOV
A1, A2	Device properties	Factory set	Default values based on typical sensor characteristics
C	Device properties	Factory set	Default values based on typical sensor characteristics
B0, B1, B2	Corrects for energy sources	Environment dependent	Calibrate in end-application environment

Copyright © 2011–2015, Texas Instruments Incorporated

8.3.5 Calibration

The TMP006 and TMP006B default coefficients are calibrated with a black body of emissivity, ε = 0.95, and an FOV (θ) = 110°. Use these coefficients for applications where the object emissivity and geometry satisfy these conditions. For applications with different object emissivity or geometry, calibrate the TMP006 or TMP006B to accurately reflect the object temperature and system geometry. Accuracy is affected by device-to-device or object-to-object variation. For the most demanding applications, calibrate each device individually.

As an overview the calibration procedure includes:

1. Defining the environmental variation range (die and object temperature range, supply voltage, temperature change speed, sampling rate and so on).
2. Making the die temperature measurements and IR sensor voltage measurements over the environmental range.
3. Generate an optimal set of coefficients based on the collected data set.

The best temperature precision is available if every device is calibrated individually. Alternatively, if all the units in the application use the same coefficients, then calibrate a statistically significant number of devices.

Recalibration may be required under any or all of the following conditions:

1. Board layout is changed.
2. Object or objects in the field of view changed.
3. Object distance changed.
4. Angle between device surface and direction to the object changed.
5. Object and local temperature range changed outside the environmental calibration range.
6. Object and local temperature transients significantly changed.
7. Supply voltage changed more than 1 V.
8. Air convection or conduction near the device.

For further information and methods for calibration, refer to user guide SBOU142, *TMP007 Calibration Guide*

8.3.6 Sensor Voltage Format

The TMP006 and TMP006B provide 16 bits of data in binary twos complement format. The positive full-scale input produces an output code of 7FFFh and the negative full-scale input produces an output code of 8000h. The output clips at these codes for signals that exceed full-scale. Table 2 summarizes the ideal output codes for different input signals. Figure 10 illustrates code transitions versus input voltage. Full-scale is a 5.12-mV signal. The LSB size is 156.25 nV.

Table 2. Input Signal Versus Ideal Output Code(1)

SENSOR SIGNAL	OUTPUT CODE
FS $(2^{15} – 1)/2^{15}$ (5.12 mV)	7FFFh
$+FS/2^{15}$ (156.25 nV)	0001h
0	0
$–FS/2^{15}$ (–156.25 nV)	FFFFh
–FS (–5.12 mV)	8000h

(1) FS = Full-scale value.

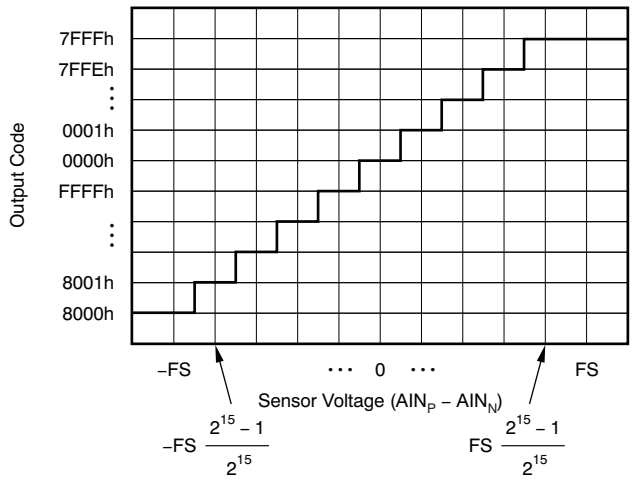

Figure 10. Code Transition Diagram

Copyright © 2011–2015, Texas Instruments Incorporated

8.3.7 Temperature Format

The temperature register data format of the TMP006 and TMP006B is reported in a binary twos complement signed integer format, as Table 3 shows, with 1 LSB = 1 / 32°C = 0.03125.

Table 3. Temperature Data Format

TEMPERATURE (°C)	DIGITAL OUTPUT (BINARY)	SHIFTED HEX
150	0100 1011 0000 0000	12C0
125	0011 1110 1000 0000	0FA0
100	0011 0010 0000 0000	0C80
80	0010 1000 0000 0000	0A00
75	0010 0101 1000 0000	0960
50	0001 1001 0000 0000	0640
25	0000 1100 1000 0000	0320
0.03125	0000 0000 0000 0100	0001
0	0000 0000 0000 0000	0000
–0.03125	1111 1111 1111 1100	FFFF
–0.0625	1111 1111 1111 1000	FFFE
–25	1111 0011 0111 0000	FCDC
–40	1110 1011 1111 1100	FAFF
–55	1110 0100 0111 1100	F91F

Converting the integer temperature result of the TMP006 and TMP006B to physical temperature is done by right-shifting the last two LSBs followed by a divide-by-32 of T_{DIE} to obtain the physical temperature result in degrees Celsius. T_{DIE} is the 14-bit signed integer contained in the corresponding register. The sign of the temperature is the same as the sign of the integer read from the TMP006 and TMP006B. In twos complement notation, the MSB is the sign bit. If the MSB is 1, the integer is negative and the absolute value can be obtained by inverting all bits and adding 1. An alternative method of calculating the absolute value of negative integers is abs(i) = i xor FFFFh + 1.

8.3.8 Serial Interface

The TMP006 and TMP006B initially start up with typical settings consisting of a conversion rate of one conversion per second (as specified in the *Electrical Characteristics*). The internal structure of the digital interface is shown in Figure 11.

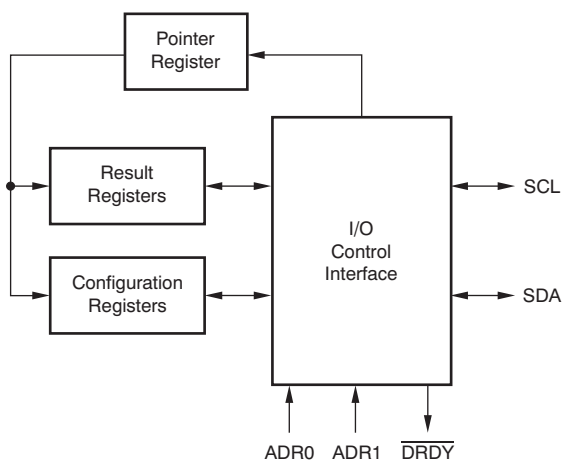

Figure 11. Internal Structure

The TMP006 and TMP006B operate only as a slave device on the two-wire bus. Connections to either bus are made via the open-drain I/O lines, SDA, and SCL. The SDA and SCL pins feature integrated spike-suppression filters and Schmitt triggers to minimize the effects of input spikes and bus noise. The TMP006 and TMP006B support the transmission protocol for fast (1 kHz to 400 kHz) and high-speed (1 kHz to 3.4 MHz) modes. All data bytes are transmitted MSB first.

8.3.8.1 Serial Bus Address

To communicate with the TMP006 or TMP006B, the master must first address slave devices via a slave address byte. The slave address byte consists of seven address bits and a direction bit that indicates the intent to execute a read or write operation.

The TMP006 and TMP006B feature two address pins to allow up to eight devices to be addressed on a single bus. Table 4 describes the pin logic levels used to properly connect up to eight devices. The state of the ADR0 and ADR1 pins is sampled on every bus communication and should be set before any activity on the interface occurs.

Table 4. TMP006 and TMP006B Address Pins and Slave Addresses

ADR1	ADR0	SMBus Address
0	0	1000000
0	1	1000001
0	SDA	1000010
0	SCL	1000011
1	0	1000100
1	1	1000101
1	SDA	1000110
1	SCL	1000111

8.3.8.2 Read and Write Operations

Access a particular register on the TMP006 and TMP006B by writing the appropriate value to the pointer register. The pointer value is the first byte transferred after the slave address byte with the R/W bit low. Every write operation to the TMP006 and TMP006B requires a value for the pointer (see Figure 12). When reading from the TMP006 or TMP006B, the last value stored in the pointer by a write operation is used to determine which register is read by a read operation. To change the register pointer for a read operation, a new value must be written to the pointer. This transaction is accomplished by issuing a slave address byte with the R/W bit low, followed by the pointer byte. No additional data are required. The master can then generate a START condition and send the slave address byte with the R/W bit high to initiate the read command. If repeated reads from the same register are desired, it is not necessary to continually send the pointer bytes because the TMP006 and TMP006B retain the pointer value until it is changed by the next write operation. Note that register bytes are sent MSB first, followed by the LSB.

Copyright © 2011–2015, Texas Instruments Incorporated

8.3.8.3 Two-Wire Timing Diagrams

The TMP006 and TMP006B use a two-wire interface (I^2C and SMBus-compatible). Figure 12 and Figure 13 illustrate the timing for the various operations on the TMP006 and TMP006B. Parameters for Figure 12 are defined in Table 5. Bus definitions are given below.

Table 5. Two-Wire Timing Diagram Definitions

PARAMETER	TEST CONDITIONS	FAST MODE		HIGH-SPEED MODE		UNIT
		MIN	MAX	MIN	MAX	
f_{SCL}	SCL operating frequency, V_S > 1.7 V	0.001	0.4	0.001	3.4	MHz
f_{SCL}	SCL operating frequency, V_S < 1.7 V	0.001	0.4	0.001	2.75	MHz
t_{BUF}	Bus free time between STOP and START condition	600		160		ns
t_{HDSTA}	Hold time after repeated START condition. After this period, the first clock is generated.	100		100		ns
t_{SUSTA}	Repeated START condition setup time	100		100		ns
t_{SUSTO}	STOP condition setup time	100		100		ns
t_{HDDAT}	Data hold time	0 (1)		0 (2)		ns
t_{SUDAT}	Data setup time	100		10		ns
t_{LOW}	SCL clock low period, V_S > 1.7 V	1300		160		ns
t_{LOW}	SCL clock low period, V_S < 1.7 V	1300		200		ns
t_{HIGH}	SCL clock high period	600		60		ns
t_F	Clock/data fall time		300			ns
t_R	Clock/data rise time		300		160	ns
t_R	Clock/data rise time for SCLK ≤ 100 kHz		1000			ns

(1) For cases with fall time of SCL less than 20 ns and/or the rise or fall time of SDA less than 20 ns, the hold time should be greater than 20 ns.
(2) For cases with a fall time of SCL less than 10 ns and/or the rise or fall time of SDA less than 10 ns, the hold time should be greater than 10 ns.

Bus Idle: Both SDA and SCL lines remain high.

Start Data Transfer: A change in the state of the SDA line from high to low while the SCL line is high defines a START condition. Each data transfer is initiated with a START condition.

Stop Data Transfer: A change in the state of the SDA line from low to high while the SCL line is high defines a STOP condition. Each data transfer terminates with a STOP or a repeated START condition.

Data Transfer: The number of data bytes transferred between a START and a STOP condition is not limited and is determined by the master device. The receiver acknowledges the transfer of data.

Acknowledge: Each receiving device, when addressed, is obliged to generate an Acknowledge bit. A device that acknowledges must pull down the SDA line during the Acknowledge clock pulse in such a way that the SDA line is stable low during the high period of the Acknowledge clock pulse. Setup and hold times must be taken into account. On a master receive, data transfer termination can be signaled by the master generating a Not-Acknowledge on the last byte that has been transmitted by the slave.

In order for the two-wire bus to operate at frequencies above 400 kHz, the master device must issue a High-speed mode (Hs-mode) master code (0000100X) as the first byte after a START condition to switch the bus to high-speed operation. The TMP006 and TMP006B do not acknowledge this byte, but switch the input filters on SDA and SCL and the output filter on SDA to operate in Hs-mode, allowing transfers at up to 3.4 MHz. After the Hs-mode master code has been issued, the master transmits a two-wire slave address to initiate a data transfer operation. The bus continues to operate in Hs-mode until a STOP condition occurs on the bus. Upon receiving the STOP condition, the TMP006 and TMP006B switch the input and output filter back to fast-mode operation.

Copyright © 2011–2015, Texas Instruments Incorporated

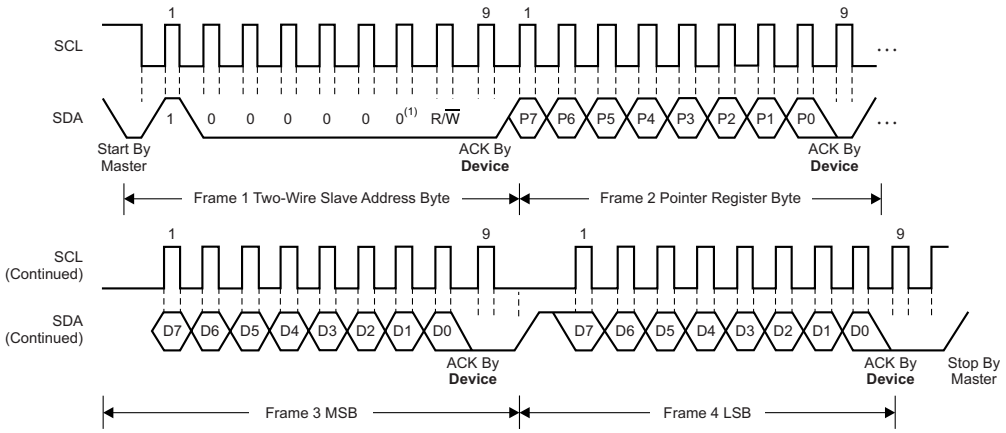

(1) Slave address 1000000 shown. Slave address changes for the TMP006 and TMP006B depend on the ADR1 and ADR0 pin connection. See Table 4 for more details.

Figure 12. Two-Wire Timing Diagram For Write Word Format

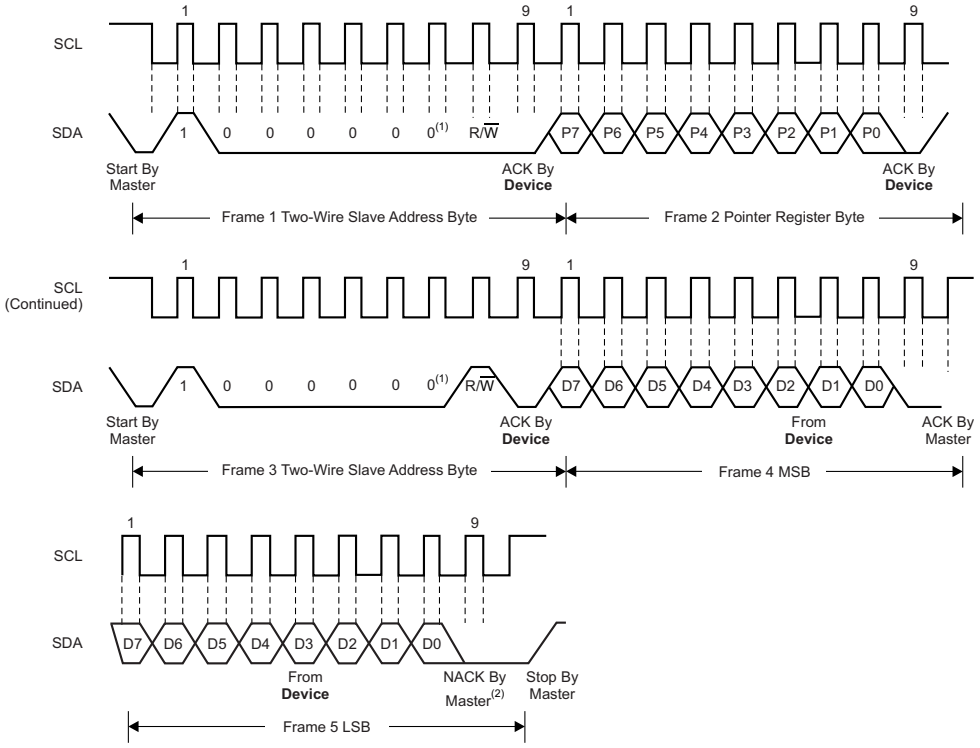

(1) Slave address 1000000 shown.

(2) Master must leave SDA high to terminate a two-byte read operation.

Figure 13. Two-Wire Timing Diagram For Two-Byte Read Format

Copyright © 2011–2015, Texas Instruments Incorporated

8.4 Device Functional Modes

The TMP006 and TMP006B operate in two modes: continuous and shutdown. A software reset function is also available. Selecting the desired operating mode is done by writing to the configuration register conversion mode select bits MOD[2:0]. The duration of the analog-to-digital (A/D) conversion is determined by the conversion rate bits CR[2:0] and is listed in Table 7. Continuous mode, on the other hand, performs an A/D conversion followed by a low-power delay in order to reduce the average power consumption. Multiple options for the conversion time and delay time are available in order to select the desired power and noise performance. Initiating power-down has an immediate effect; it aborts the current conversion and puts the device into a low-power shutdown mode. RST, or software reset, is also immediate and initializes all memory locations with the respective reset values.

8.5 Register Maps

The TMP006 and TMP006B contain data registers that hold configuration information, temperature measurement results, and status information.

Table 6. Register Map

POINTER (HEX)	REGISTER	D15	D14	D13	D12	D11	D10	D9	D8	D7	D6	D5	D4	D3	D2	D1	D0
00h	Sensor voltage	V15	V14	V13	V12	V11	V10	V9	V8	V7	V6	V5	V4	V3	V2	V1	V0
01h	Local temperature	T13	T12	T11	T10	T9	T8	T7	T6	T5	T4	T3	T2	T1	T0	0	0
02h	Configuration	RST	MOD3	MOD2	MOD1	CR3	CR2	CR1	EN	$\overline{\text{DRDY}}$	0	0	0	0	0	0	0
FEh	Manufacturer ID	ID15	ID14	ID13	ID12	ID11	ID10	ID9	ID8	ID7	ID6	ID5	ID4	ID3	ID2	ID1	ID0
FFh	Device ID	ID15	ID14	ID13	ID12	ID11	ID10	ID9	ID8	ID7	ID6	ID5	ID4	ID3	ID2	ID1	ID0

8.5.1 Sensor Voltage Result (V_{SENSOR}) Register (address = 00h) [reset = 0000000000000000]

The sensor voltage register is a 16-bit result register in binary twos complement format. One least significant bit (LSB) is 156.25 nV. The full-scale value is a ±5.12 mV signal. Data from this register (Figure 14) are used in conjunction with data from the Temperature register to calculate the object temperature. Figure 14 summarizes the Sensor Voltage register. The equation for the resultant object temperature is discussed in the *TMP006 User Guide* (SBOU107).

Figure 14. Sensor Voltage Result (V_{SENSOR}) Register

15	14	13	12	11	10	9	8	7	6	5	4	3	2	1	0
V15	V14	V13	V12	V11	V10	V9	V8	V7	V6	V5	V4	V3	V2	V1	V0
R-0h	R-0h	R-0h	R-0h	R-0h	R-0h	R-0h	R-0h	R-0h	R-0h	R-0h	R-0h	R-0h	R-0h	R-0h	R-0h

LEGEND: R/W = Read/Write; R = Read only; -n = value after reset

8.5.2 Temperature (T_{DIE}) Register (address = 01h) [reset = 0000000000000000]

The temperature register of the TMP006 and TMP006B is configured as a 14-bit, read-only register (as shown in Figure 15) that stores the result of the most recent conversion for the die temperature, T_{DIE}. Following power-up or a software reset, the Temperature Register reads 0°C (0000h) until the first conversion is complete.

Figure 15. Temperature (T_{DIE}) Register

15	14	13	12	11	10	9	8	7	6	5	4	3	2	1	0
T13	T12	T11	T10	T9	T8	T7	T6	T5	T4	T3	T2	T1	T0	—	—
R-0h	R-0h	R-0h	R-0h	R-0h	R-0h	R-0h	R-0h	R-0h	R-0h	R-0h	R-0h	R-0h	R-0h	R-0h	R-0h

LEGEND: R/W = Read/Write; R = Read only; -n = value after reset

8.5.3 Configuration Register (address = 02h) [reset = 0111010000000000]

Figure 16 describes the configuration register. This register determines the operational modes, conversion rate, $\overline{\text{DRDY}}$ control, initiates a single conversion, performs a software reset, or puts the device into shutdown mode. This register is read/write, and the pointer address is 02h.

Figure 16. Configuration Register

15	14	13	12	11	10	9	8	7	6	5	4	3	2	1	0
RST	MOD2	MOD1	MOD0	CR2	CR1	CR0	EN	$\overline{\text{DRDY}}$	—	—	—	—	—	—	—
R/W-0h	R/W-1h	R/W-1h	R/W-1h	R/W-0h	R/W-1h	R/W-0h	R/W-0h	R/W-0h	R/W-0h	R/W-0h	R/W-0h	R/W-0h	R/W-0h	R/W-0h	R/W-0h

LEGEND: R/W = Read/Write; R = Read only; -n = value after reset

Bit [15] **RST: Software reset bit**

0 = Normal operation, this bit self clears
1 = Software reset

Bits [14:12] **MOD[2:0]: Mode of operation**

000 = Power-down
111 = Sensor and die continuous conversion (MOD)

Bits [11:9] **CR[2:0]: ADC conversion rate**

See Table 7.

Bit [8] **EN: $\overline{\text{DRDY}}$ enable bit**

0 = $\overline{\text{DRDY}}$ pin disabled
1 = $\overline{\text{DRDY}}$ pin enabled

Bit [7] **$\overline{\text{DRDY}}$: Data ready bit**

0 = Conversion in progress
1 = Object voltage and ambient temperature results are ready to read. A temperature or sensor voltage read or a write to the Configuration Register is required to clear the condition.

Bits [6:0] **Unused [6:0]**

Table 7. Conversion Rate

CR2	CR1	CR0	CONVERSION RATE (conversions/sec)	TOTAL NUMBER OF AVERAGED SAMPLES	AVERAGE I_Q (µA)	PEAK-PEAK NOISE OF THE T_{OBJ} RESULT (°C)
0	0	0	4	1	240	0.5
0	0	1	2	2	240	0.35
0	1	0	1	4	240	0.25 (default)
0	1	1	0.5	8	240	0.18
1	0	0	0.25	16	240	0.125

8.5.4 Manufacturer and Device ID Registers

The TMP006 and TMP006B have two identification registers: manufacturer ID (address FEh) shown in Figure 17, and device ID (address FFh) shown in Figure 18. The manufacturer ID reads 5449h and the device ID is 0067h.

8.5.4.1 Manufacturer ID Register (address = FEh) [reset = 0101010001001001]

Figure 17. Manufacturer ID Register

15	14	13	12	11	10	9	8	7	6	5	4	3	2	1	0
ID15	ID14	ID13	ID12	ID11	ID10	ID9	ID8	ID7	ID6	ID5	ID4	ID3	ID2	ID1	ID0
R-0h	R-1h	R-0h	R-1h	R-0h	R-1h	R-0h	R-0h	R-0h	R-1h	R-0h	R-0h	R-1h	R-0h	R-0h	R-1h

LEGEND: R/W = Read/Write; R = Read only; -n = value after reset

8.5.4.2 Device ID Register (address = FFh) [reset = 0000000001100111]

Figure 18. Device ID Register

15	14	13	12	11	10	9	8	7	6	5	4	3	2	1	0
ID15	ID14	ID13	ID12	ID11	ID10	ID9	ID8	ID7	ID6	ID5	ID4	ID3	ID2	ID1	ID0
R-0h	R-0h	R-0h	R-0h	R-0h	R-0h	R-0h	R-0h	R-0h	R-1h	R-1h	R-0h	R-0h	R-1h	R-1h	R-1h

LEGEND: R/W = Read/Write; R = Read only; -n = value after reset

Copyright © 2011–2015, Texas Instruments Incorporated

9 Application and Implementation

NOTE

Information in the following applications sections is not part of the TI component specification, and TI does not warrant its accuracy or completeness. TI's customers are responsible for determining suitability of components for their purposes. Customers should validate and test their design implementation to confirm system functionality.

9.1 Application Information

The TMP006 and TMP006B are a complete IR thermopile sensor system on a chip that includes the sensing element, signal conditioner, and ADC. These devices are ideal for applications where the object cannot be placed in thermal contact with a conventional temperature sensor. Common reasons for noncontact temperature sensing are:

- Distance; the object is too far away, or in an inconvenient location for wired connections.
- The object is in motion.
- Direct contact of the object is inconvenient or uncomfortable (for example, skin).
- The object is a fluid (that is, liquid or gas).
- The object is hazardous (for example, acid or flammable).
- The object is in a hazardous state (for example, high voltage).

9.2 Typical Application

9.2.1 Wide-Range Calibration Example: T_{OBJ} = 0°C to 60°C, Common vs Unit Calibration

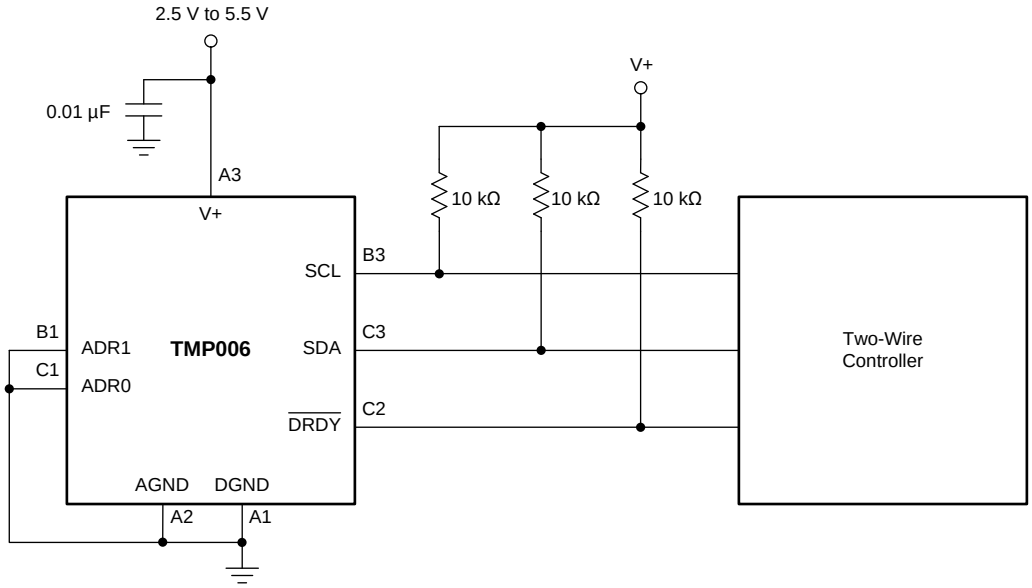

Figure 19. Typical Application Circuit

Typical Application (continued)

9.2.1.1 Design Requirements

For this application, the system must operate over the environment described in Table 8.

Table 8. Wide-Range Parameters

DESIGN PARAMETER	EXAMPLE VALUE	COMMENT
N	32	Number of devices in calibration set
Minimum T_{DIE}	0°C	Minimum expected die temperature
Maximum T_{DIE}	60°C	Maximum expected die temperature
Minimum T_{OBJ}	0°C	Minimum expected objected temperature
Maximum T_{OBJ}	60°C	Maximum expected object temperature
ε	0.95	Object emissivity
Field of view	110°	Field of view subtended by object
Conversion rate	1 sample/second	

Select a set of values for T_{DIE} and T_{OBJ} to generate the calibration set. At a minimum, include the four extreme points of the temperature ranges desired. In practice, it is best to include a number of intermediate points as well. This example uses the values shown in Table 9, with an *X* marking the values chosen for measurement.

Table 9. Wide-Range Measurement Values

	T_{DIE}			
T_{OBJ}	0°C	20°C	40°C	60°C
0°C	X	X	X	X
20°C	X	X	X	X
40°C	X	X	X	X
60°C	X	X	X	X

9.2.1.2 Detailed Design Procedure

Before attempting to calibrate the system, it is necessary to establish the stability of the system. Noise is a measure of precision, which is the random deviation from the mean of the distribution. For a Gaussian (or normal) distribution, the precision is typically characterized by the standard deviation (sensor noise), σ.

9.2.1.2.1 Wide-Range Calibration

To begin calibration, select an object temperature (T_{OBJ}) and a value for the die temperature (T_{DIE}). With these system temperatures stable, take a statistically significant number of samples of V_{Sensor} (results shown in register 00h).

In this example, 64 samples were taken.

To compensate for first order drift in system temperatures, it is often useful to normalize the data set. For this purpose, for each temperature set, the sensor voltage data (given in register 00h) is normalized by first finding the best fit line of the form shown in Equation 9:

$$\text{Sensor (mV)} = a \times \text{SampleNo} + b \tag{9}$$

The normalized data for each data set is then calculated as shown in Equation 10:

$$\text{Sensor}_{NORM}\ (\text{mV}) = \text{Sensor}_{MEAS} - (a \times \text{SampleNo} + b) \tag{10}$$

The normalized data, V_{Sensor_norm}, is centered on zero mean, and is first-order corrected for long-term drift. The standard deviation for each data set is then calculated to estimate the sensor noise, σ. Verify that the data are limited by white noise and no other effects. For a sensor-noise-limited data set, v_{SENSOR} σ is typically < 1 µV, and preferably < 0.5 µV after first-order correction for drift, as described previously. If this condition is not satisfied, then the calibration accuracy is limited by external system factors (for example, convection or conduction). Repeat this process for each combination of T_{OBJ} and T_{DIE} for which the calibration is to be performed. The normalized data are used only for evaluating the suitability of the data set for calibration, and not for the actual calibration itself.

Copyright © 2011–2015, Texas Instruments Incorporated

For calibration, the mean value, $<V_{SENSOR}>$, is calculated for each combination of T_{OBJ} and T_{DIE}, as shown in Table 10. Using the mean value minimizes error introduced by random noise. Based on the means, a set of coefficients is generated based on a user-selected optimization criteria for Equation 7. Common criteria are minimizing the maximum error, minimizing the average error, and so on. For a detailed discussion of optimization methods, see user guide SBOU142, TMP007 Calibration Guide.

Table 10. Mean Values

T_{OBJ}	T_{DIE}			
	0°C	20°C	40°C	60°C
0°C	$<V_{SENSOR}>$	$<V_{SENSOR}>$	$<V_{SENSOR}>$	$<V_{SENSOR}>$
20°C	$<V_{SENSOR}>$	$<V_{SENSOR}>$	$<V_{SENSOR}>$	$<V_{SENSOR}>$
40°C	$<V_{SENSOR}>$	$<V_{SENSOR}>$	$<V_{SENSOR}>$	$<V_{SENSOR}>$
60°C	$<V_{SENSOR}>$	$<V_{SENSOR}>$	$<V_{SENSOR}>$	$<V_{SENSOR}>$

9.2.1.2.2 Verifying the Calibration

The next step is to use the generated coefficients to verify the calibration, and determine the accuracy of the system. For common calibration (C) , the same coefficients are used for all devices; in unit calibration (U) the coefficients are calculated for each device. Common calibration includes device-to-device variation, and thus is less accurate, but much easier to implement. Unit calibration is more accurate, and eliminates device variation, but requires more effort to implement. The choice depends on the application requirements for accuracy versus implementation effort.

Mean calibration error at each point is defined as shown in Equation 11:

$$E_{MEAN} = \frac{1}{N}\sum_{1}^{N}(T_{OBJ_PREDICT} - T_{OBJ_ACTUAL})$$

where

- $T_{OBJ_PREDICT}$ is the temperature based on the calibration coefficients.
- T_{OBJ_ACTUAL} is the known object temperature, measured independently.
- N is the number of devices in the calibration set. (11)

The mean error graph (see Figure 20) provides an efficient method of understanding how the systematic errors vary across the temperature ranges of interest. This graph also provides a means of weighing the benefits and efforts of common versus unit calibration for a particular application.

Note that calibration does not affect the temporal random noise observed, as shown in Figure 21. The standard deviation of the temperature error is independent of the calibration if the random error is dominated by the sensor noise and not external system factors, such as convection and conduction. For common calibration, the total standard deviation increases because of the effects of device-to-device variation. This standard deviation is calculated in the usual way, by substituting $T_{OBJ_PREDICT}$ for the mean in the standard deviation formula.

The accuracy is then defined as the mean calibration error plus the random errors from all sources. For this example application, use the criteria shown in Equation 12:

$$\text{Accuracy} = \text{Mean Calibration Error} \pm 3 \text{ Standard Deviations} \quad (12)$$

9.2.1.3 Application Curves

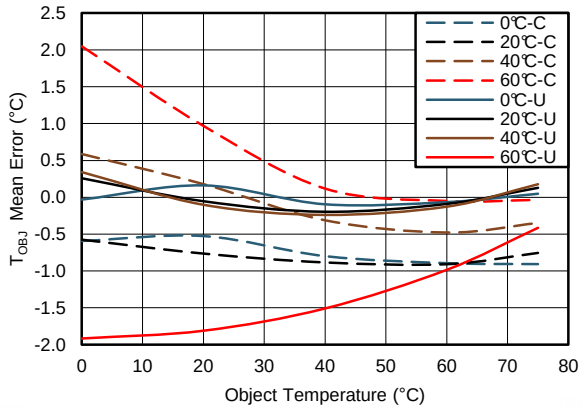

Figure 20. Mean Calibration Error, Wide Range Over T_{DIE}

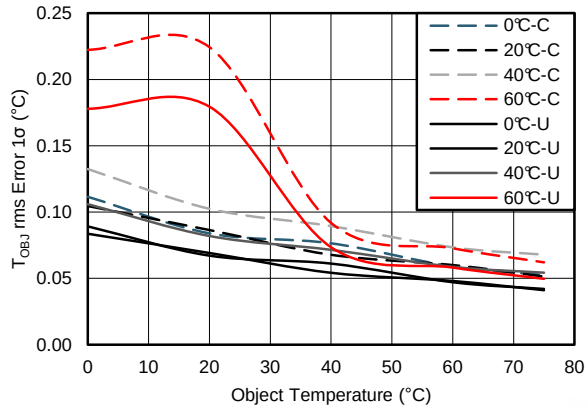

Figure 21. Noise in Temperature Measurement, Wide Range Over T_{DIE}

9.3 System Examples

9.3.1 Use of NEP, NETD, and Responsivity in Estimating System Performance

It is often necessary to estimate system performance as part of the design process. A key system parameter is temperature accuracy for a given set of parameters. Table 11 lists example parameters for estimating system performance.

Table 11. Estimating System Performance Parameters

DESIGN PARAMETER	EXAMPLE VALUE	COMMENT
Object distance	10 mm	Distance to object
Object diameter	15 mm	Object size and geometry
ε	0.95	Object emissivity
T_{DIE}	23°C	Die temperature
T_{OBJ}	30°C	Maximum expected object temperature
FOV	110°	Field of view subtended by object
Responsivity (R_0)	10.8 V/W	Responsivity for T_{DIE} = 25°C, θ = 0°
Responsivity (R)	9 V/W	Responsivity for 110° FOV
Sensor rms noise	0.20 µV	RMS sensor noise at T_{DIE} = 25°C
NEP	30 nW	Thermal power equivalent to rms sensor noise
Conversion rate	1 SPS	SPS = samples per second

The system accuracy is a function of T_{OBJ}, T_{DIE}, ε, and radiation transfer.

The radiation transfer factor is system dependent, and is affected by the object distance and geometry (for example, planar versus curved surfaces, or presence of lenses). For an planar object perpendicular to the detector axis (see Figure 7), the radiation transfer follows the well-known $\sin^2(\theta)$ result. This expression can be used with a radiation transfer function responsivity value of 9 V/W to estimate system performance.

Because of the angular dependence of the TMP006 and TMP006B detector response, a more accurate representation for the same radiative transfer function geometry is shown in Equation 13:

$$\frac{2}{3}\left(1-\cos^3\theta\right)R_0 \tag{13}$$

where

- R_0 is the responsivity of the detector to a point source at an angle normal to the detector (θ = 0 in Figure 7. R_0 has a value of ~10.8 V/W at 25°C.

The responsivity value of 9 V/W is based on a system with a 110° FOV.

Copyright © 2011–2015, Texas Instruments Incorporated

Using the device-specific radiation transfer expression and R0, the detector response is shown in Equation 14:

$$V_{SENSOR} = \frac{2}{3}\varepsilon_{OBJ}\sigma_B\left(T_{OBJ}^4 - T_{DIE}^4\right)A_{det}(1-\cos^3\theta)R_0$$

where

- ε_{OBJ} is the emissivity of the object (0.95).
- B is the Stefan-Boltzmann constant (5.67×10^{-12} W/cm$_2$ /K^4).
- T_{OBJ} is the object temperature (273 K + 30°C).
- T_{DIE} is the detector temperature (273 K + 23°C).
- A_{det} is the detector active area (1.09×10^{-3} cm^2)
- θ is the half-angle subtended by the object as viewed from the detector.
- R_0 is the responsivity (~10.8 V/W for the specified temperatures). (14)

The value of cos θ is shown in Equation 15:

$$\cos\theta = \frac{2r}{\sqrt{4r^2 + D^2}} = 0.800$$

where

- *r* is the distance between the detector and the object (10 mm).
- *D* is the diameter of the object (15 mm). (15)

Differentiating with respect to object temperature, a small change in temperature creates a small change in the measured voltage given by Equation 16:

$$\Delta V_{OUT} = \tfrac{8}{3}\varepsilon_{OBJ}\sigma_B T_{OBJ}^3 A_{det}\left(1-\cos^3\theta\right)R_0\,\Delta T_{OBJ} \tag{16}$$

Substituting values for the parameters yields Equation 17:

$$\Delta V_{SENSOR} = 2.3\frac{\mu V}{K} \times T_{OBJ} \tag{17}$$

The sensor rms noise at T_{DIE} = 25°C is ~0.25 µV; thus, the rms variation in temperature measurement is as shown in Equation 18:

$$\Delta T_{OBJ} = \frac{Sensor_{rms\,noise}}{\Delta V_{OUT}} = \frac{0.25\ \mu V}{2.3\ \mu V/K} \approx 110\ mK \tag{18}$$

The peak-to-peak noise is approximately six times the rms noise; therefore, estimate an accuracy of approximately ±0.33°C.

This estimate can also be made using the noise-equivalent power (NEP), noting that NEP is the ratio of noise to responsivity, as shown in Equation 19:

$$NEP = \frac{\Delta V_{OUT}}{R_0} = \tfrac{8}{3}\varepsilon_{OBJ}\sigma_B T_{OBJ}^3 A_{det}\left(1-\cos^3\theta\right)\Delta T_{OBJ} = \left(213\frac{nW}{K}\right)\Delta T_{OBJ} \tag{19}$$

Assuming the system is sensor-noise limited, the NEP is ~30 nW at 25°C, as shown in Equation 20:

$$\Delta T_{OBJ} = \frac{30\ nW}{213\ nW/K} \approx 140\ mK \tag{20}$$

Again, the peak-to-peak noise is approximately 6X the rms noise; therefore estimate an accuracy of approximately ±0.42°C.

The different results from these two techniques is because of estimated values used for some parameters. The purpose of these techniques is not to obtain exact answers, but rather to quickly estimate the feasibility of a system implementation based on basic system parameters. These examples are intended only as guidelines; the specific values for the parameters depend on the specific system details.

Copyright © 2011–2015, Texas Instruments Incorporated

10 Power-Supply Recommendations

The TMP006 and TMP006B are designed to operate with a power supply voltage (V_S) of between 2.5 V and 5.5 V. This input supply must be well regulated. The die temperature measurement (T_{DIE}) dependence on supply voltage is typically 20 m°C/V for T_{DIE} > 0°C. The power-on reset (POR) has a nominal value of 1.9 V at T_{DIE} = 25°C. The POR increases with decreasing die temperature. Place the decoupling capacitor (0.01 µF recommended) as close as possible to the device without obstructing the field of view.

Copyright © 2011–2015, Texas Instruments Incorporated

11 Layout

11.1 Layout Guidelines

The IR thermopile sensor in the TMP006 and TMP006B is as susceptible to conducted and radiant IR energy from below the sensor on the PCB as it is to the IR energy from objects in its forward-looking field of view. When the area of PCB below the TMP006 or TMP006B is at the same temperature as the die or substrate of the TMP006 or TMP006B, heat is not transferred between the IR sensor and the PCB. However, temperature changes on a closely-placed target object or other events that lead to changes in system temperature can cause the PCB temperature and the TMP006 or TMP006B temperature to drift apart from each other. This drift in temperatures can cause a heat transfer between the IR sensor and the PCB to occur. Because of the small distance between the PCB and the bottom of the sensor, this heat energy will be conducted (as opposed to radiated) through the thin layer of air between the IR sensor and the PCB below it. This heat conduction causes offsets in the IR sensor voltage readings and ultimately leads to temperature calculation errors. To prevent and minimize these errors, the TMP006 and TMP006B layouts must address critical factors:

Thermally isolate the TMP006 and TMP006B from the rest of the PCB and any heat sources on it. Provide a stable thermal environment to reduce the noise in the measurement readings

Figure 22 illustrates the concept of thermally isolating the TMP006 and TMP006B from the PCB and external heat sources such as other components, air currents, and so on.

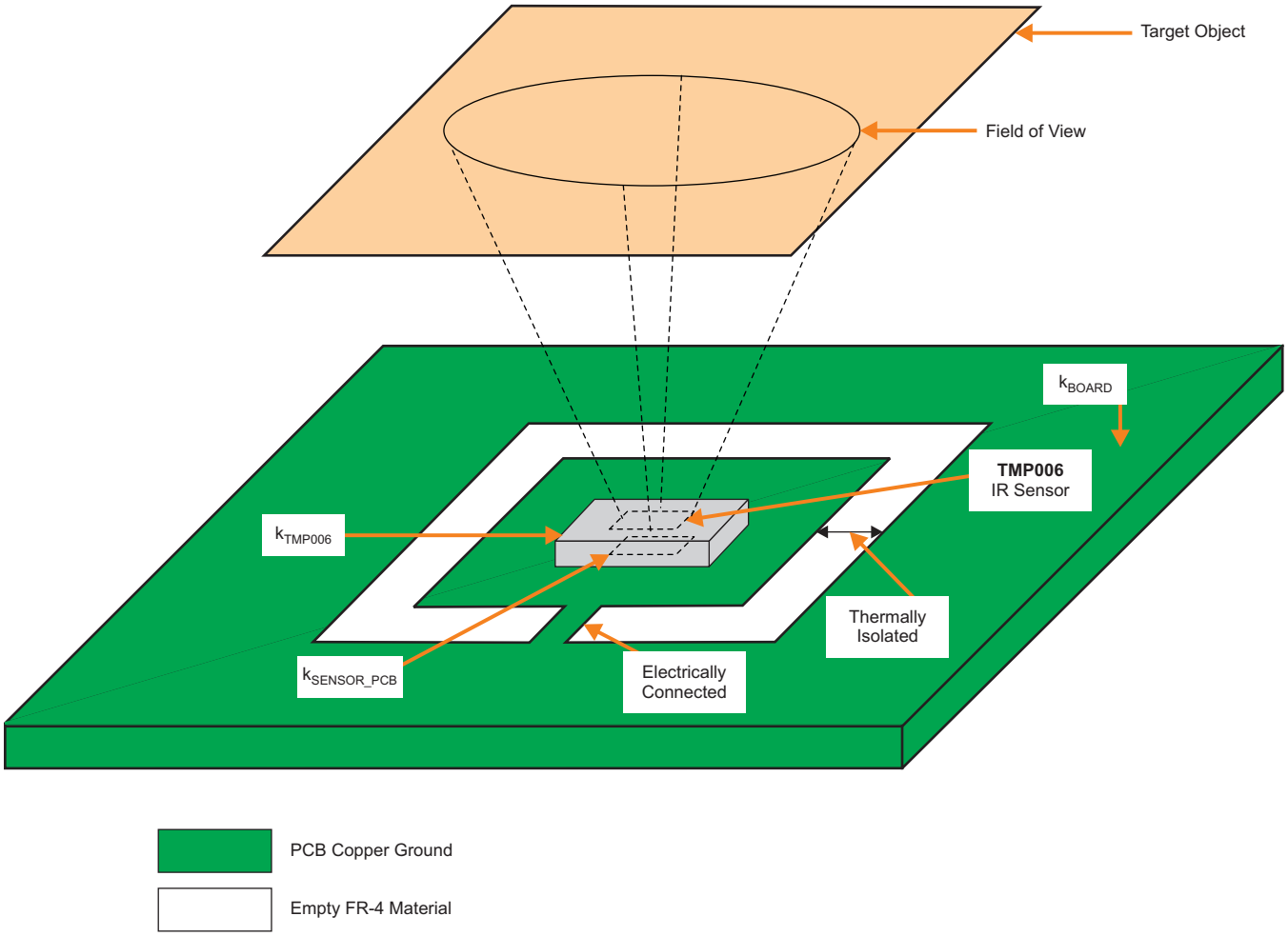

Figure 22. Principle of TMP006 and TMP006B Thermal Isolation

11.2 Layout Examples

For more detailed information, refer to SBOU108 — *TMP006 Layout and Assembly Guidelines*.

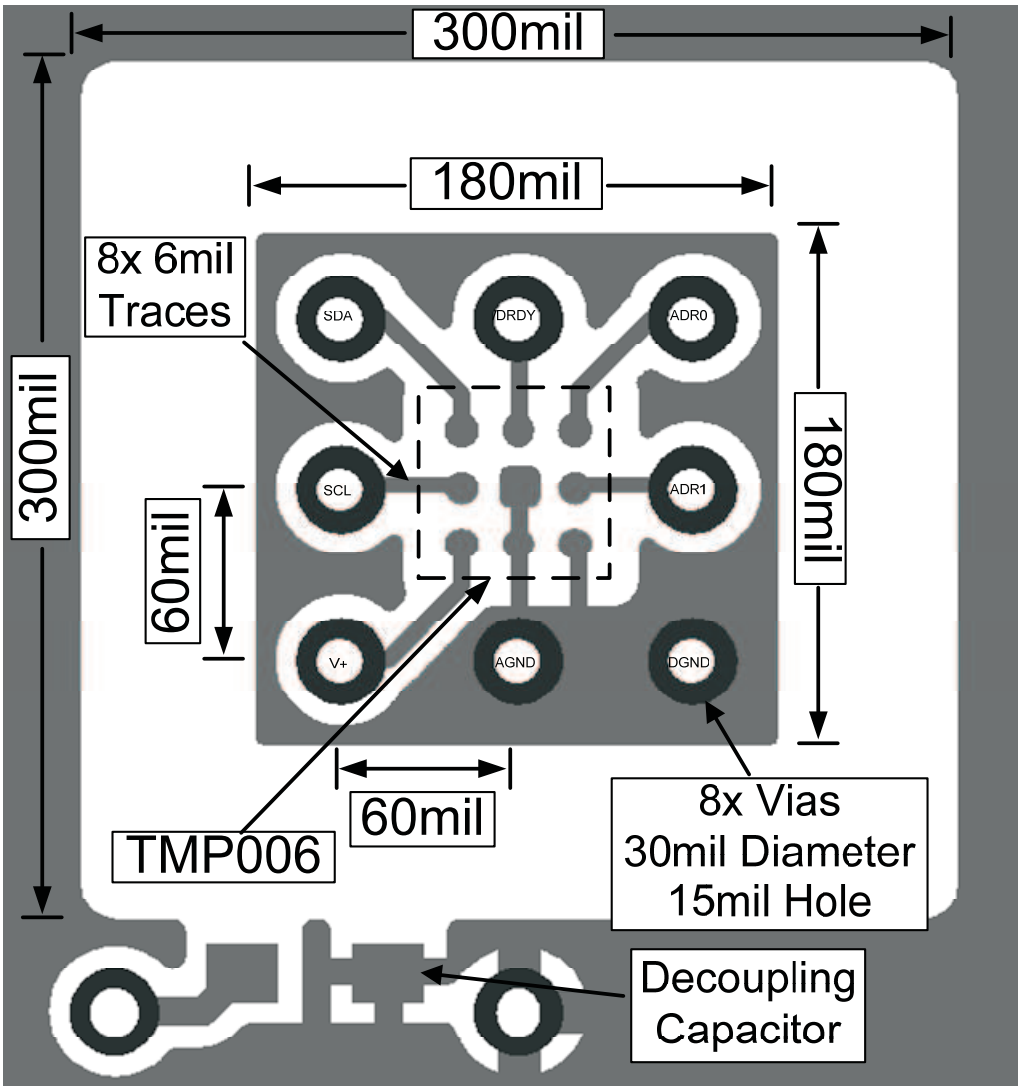

Figure 23. Top Layer

Copyright © 2011–2015, Texas Instruments Incorporated

Layout Examples (continued)

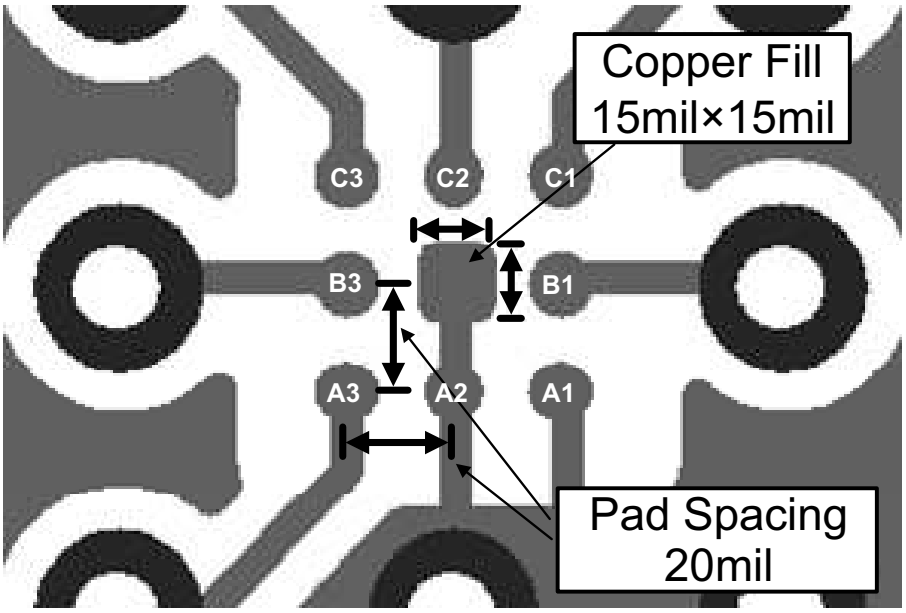

Figure 24. Enlarged View

Use a 12-mil pad and 15-mil solder balls for A1, A2, A3, B1, B3, C1, C2 and C3.

Layout Examples (continued)

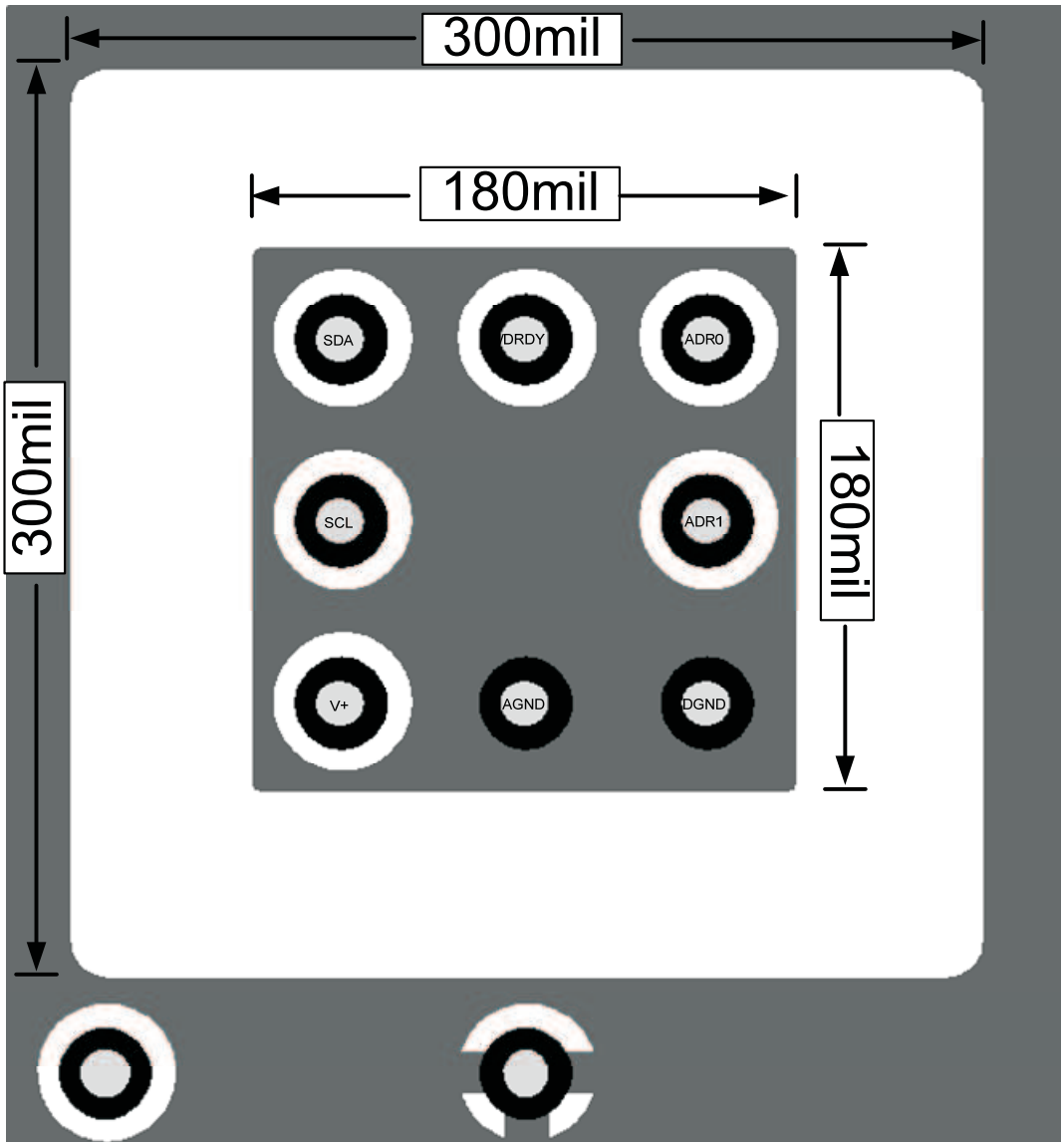

Figure 25. Bottom Layer

Copyright © 2011–2015, Texas Instruments Incorporated

12 Device and Documentation Support

12.1 Device Support

12.1.1 Device Nomenclature

The device performance is characterized by the signal, responsivity, and the noise of the sensor. The sensor noise can be characterized in terms of the raw sensor voltage, or in terms of a reference system with known optical transfer function.

Responsivity A measure of the voltage generated by the thermopile as a function of the thermal radiation incident on the device. The responsivity is measured in V/W. Typically incident radiations are in µW and sensor output voltages in µV.

Sensor Noise The noise voltage intrinsic to the sensor given in nV. This parameter is conversion-time dependent.

Noise Equivalent Power (NEP) The smallest thermal power difference that the detector can reliably detect; measured in nW. The NEP is a function of the sensor noise and the responsivity.

Noise Equivalent Temperature Difference (NETD) The smallest temperature difference the detector can reliably detect; measured in milliKelvins (mK). The NETD is a function of the sensor noise, responsivity and the system specific optical path.

For comparison purposes, NETD is given for a reference system without a lens and with an ideal (nonabsorbing) F/1 lens.

12.2 Documentation Support

12.2.1 Related Documentation

TMP007 Calibration Guide, SBOU142.

TMP006 Layout and Assembly Guidelines, SBOU108.

12.3 Related Links

Table 12 lists quick access links. Categories include technical documents, support and community resources, tools and software, and quick access to sample or buy.

Table 12. Related Links

PARTS	PRODUCT FOLDER	SAMPLE & BUY	TECHNICAL DOCUMENTS	TOOLS & SOFTWARE	SUPPORT & COMMUNITY
TMP006	Click here	Click here	Click here	Click here	Click here
TMP006B	Click here	Click here	Click here	Click here	Click here

12.4 Trademarks

All trademarks are the property of their respective owners.

12.5 Electrostatic Discharge Caution

This integrated circuit can be damaged by ESD. Texas Instruments recommends that all integrated circuits be handled with appropriate precautions. Failure to observe proper handling and installation procedures can cause damage.

ESD damage can range from subtle performance degradation to complete device failure. Precision integrated circuits may be more susceptible to damage because very small parametric changes could cause the device not to meet its published specifications.

12.6 Glossary

SLYZ022 — *TI Glossary*.

This glossary lists and explains terms, acronyms, and definitions.

13 Mechanical, Packaging, and Orderable Information

The following pages include mechanical, packaging, and orderable information. This information is the most current data available for the designated devices. This data is subject to change without notice and revision of this document. For browser-based versions of this data sheet, refer to the left-hand navigation.

Copyright © 2011–2015, Texas Instruments Incorporated

PACKAGING INFORMATION

Orderable Device	Status (1)	Package Type	Package Drawing	Pins	Package Qty	Eco Plan (2)	Lead/Ball Finish (6)	MSL Peak Temp (3)	Op Temp (°C)	Device Marking (4/5)	Samples
HPA01108AIYZFR	NRND	DSBGA	YZF	8	3000	Green (RoHS & no Sb/Br)	SNAGCU	Level-2-260C-1 YEAR	-40 to 125	TMP006	
TMP006AIYZFR	NRND	DSBGA	YZF	8	3000	Green (RoHS & no Sb/Br)	SNAGCU	Level-2-260C-1 YEAR	-40 to 125	TMP006	
TMP006AIYZFT	NRND	DSBGA	YZF	8	250	Green (RoHS & no Sb/Br)	SNAGCU	Level-2-260C-1 YEAR	-40 to 125	TMP006	
TMP006BIYZFR	NRND	DSBGA	YZF	8	3000	Green (RoHS & no Sb/Br)	SNAGCU	Level-2-260C-1 YEAR	-40 to 125	T006B	
TMP006BIYZFT	NRND	DSBGA	YZF	8	250	Green (RoHS & no Sb/Br)	SNAGCU	Level-2-260C-1 YEAR	-40 to 125	T006B	

(1) The marketing status values are defined as follows:
ACTIVE: Product device recommended for new designs.
LIFEBUY: TI has announced that the device will be discontinued, and a lifetime-buy period is in effect.
NRND: Not recommended for new designs. Device is in production to support existing customers, but TI does not recommend using this part in a new design.
PREVIEW: Device has been announced but is not in production. Samples may or may not be available.
OBSOLETE: TI has discontinued the production of the device.

(2) **RoHS:** TI defines "RoHS" to mean semiconductor products that are compliant with the current EU RoHS requirements for all 10 RoHS substances, including the requirement that RoHS substance do not exceed 0.1% by weight in homogeneous materials. Where designed to be soldered at high temperatures, "RoHS" products are suitable for use in specified lead-free processes. TI may reference these types of products as "Pb-Free".
RoHS Exempt: TI defines "RoHS Exempt" to mean products that contain lead but are compliant with EU RoHS pursuant to a specific EU RoHS exemption.
Green: TI defines "Green" to mean the content of Chlorine (Cl) and Bromine (Br) based flame retardants meet JS709B low halogen requirements of <=1000ppm threshold. Antimony trioxide based flame retardants must also meet the <=1000ppm threshold requirement.

(3) MSL, Peak Temp. - The Moisture Sensitivity Level rating according to the JEDEC industry standard classifications, and peak solder temperature.

(4) There may be additional marking, which relates to the logo, the lot trace code information, or the environmental category on the device.

(5) Multiple Device Markings will be inside parentheses. Only one Device Marking contained in parentheses and separated by a "~" will appear on a device. If a line is indented then it is a continuation of the previous line and the two combined represent the entire Device Marking for that device.

(6) Lead/Ball Finish - Orderable Devices may have multiple material finish options. Finish options are separated by a vertical ruled line. Lead/Ball Finish values may wrap to two lines if the finish value exceeds the maximum column width.

Important Information and Disclaimer: The information provided on this page represents TI's knowledge and belief as of the date that it is provided. TI bases its knowledge and belief on information provided by third parties, and makes no representation or warranty as to the accuracy of such information. Efforts are underway to better integrate information from third parties. TI has taken and continues to take reasonable steps to provide representative and accurate information but may not have conducted destructive testing or chemical analysis on incoming materials and chemicals. TI and TI suppliers consider certain information to be proprietary, and thus CAS numbers and other limited information may not be available for release.

In no event shall TI's liability arising out of such information exceed the total purchase price of the TI part(s) at issue in this document sold by TI to Customer on an annual basis.

TAPE AND REEL INFORMATION

REEL DIMENSIONS

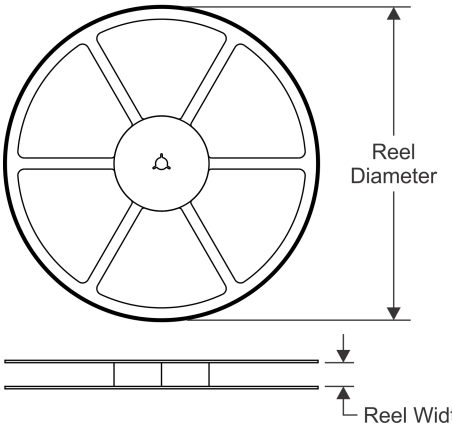

TAPE DIMENSIONS

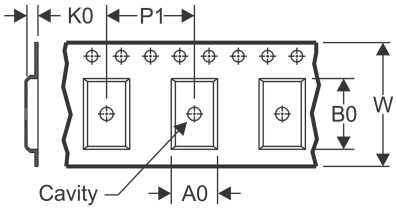

A0	Dimension designed to accommodate the component width
B0	Dimension designed to accommodate the component length
K0	Dimension designed to accommodate the component thickness
W	Overall width of the carrier tape
P1	Pitch between successive cavity centers

QUADRANT ASSIGNMENTS FOR PIN 1 ORIENTATION IN TAPE

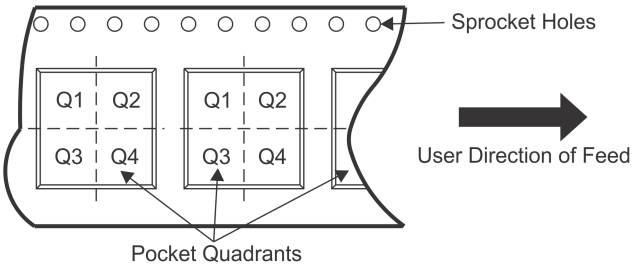

*All dimensions are nominal

Device	Package Type	Package Drawing	Pins	SPQ	Reel Diameter (mm)	Reel Width W1 (mm)	A0 (mm)	B0 (mm)	K0 (mm)	P1 (mm)	W (mm)	Pin1 Quadrant
TMP006AIYZFR	DSBGA	YZF	8	3000	180.0	8.4	1.65	1.65	0.81	4.0	8.0	Q1
TMP006AIYZFT	DSBGA	YZF	8	250	180.0	8.4	1.65	1.65	0.81	4.0	8.0	Q1
TMP006BIYZFR	DSBGA	YZF	8	3000	180.0	8.4	1.65	1.65	0.81	4.0	8.0	Q1
TMP006BIYZFT	DSBGA	YZF	8	250	180.0	8.4	1.65	1.65	0.81	4.0	8.0	Q1

TAPE AND REEL BOX DIMENSIONS

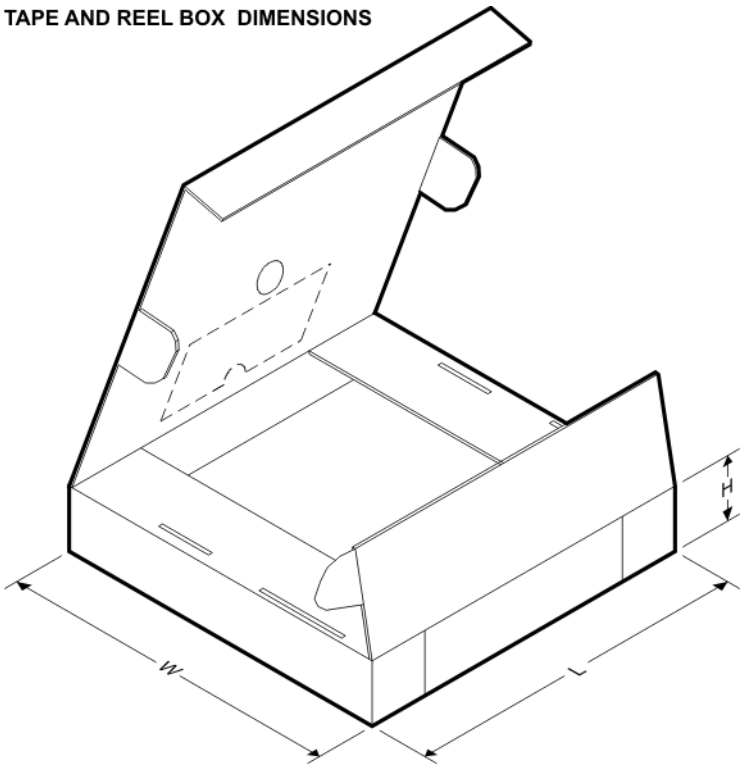

*All dimensions are nominal

Device	Package Type	Package Drawing	Pins	SPQ	Length (mm)	Width (mm)	Height (mm)
TMP006AIYZFR	DSBGA	YZF	8	3000	182.0	182.0	20.0
TMP006AIYZFT	DSBGA	YZF	8	250	182.0	182.0	20.0
TMP006BIYZFR	DSBGA	YZF	8	3000	182.0	182.0	20.0
TMP006BIYZFT	DSBGA	YZF	8	250	182.0	182.0	20.0

YZF (S-XBGA-N8) DIE-SIZE BALL GRID ARRAY

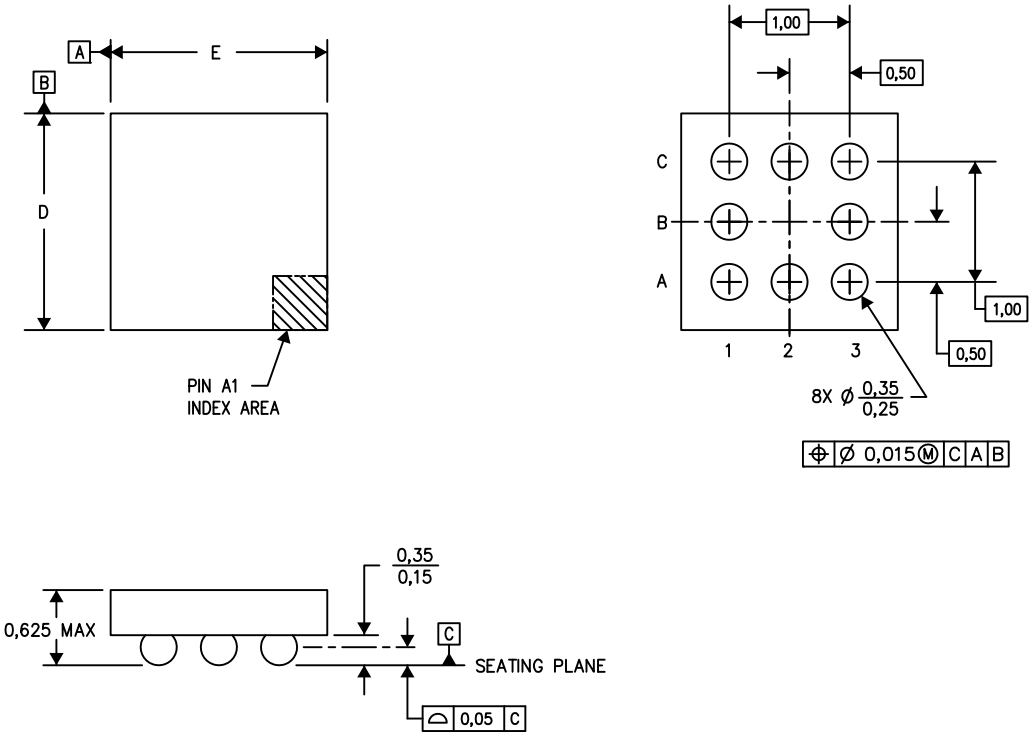

D: Max = 1.566 mm, Min =1.506 mm

E: Max = 1.566 mm, Min =1.506 mm

4205058-3/P 07/13

NOTES: A. All linear dimensions are in millimeters. Dimensioning and tolerancing per ASME Y14.5M-1994.
B. This drawing is subject to change without notice.
C. NanoFree™ package configuration.

NanoFree is a trademark of Texas Instruments.

IMPORTANT NOTICE

Texas Instruments Incorporated (TI) reserves the right to make corrections, enhancements, improvements and other changes to its semiconductor products and services per JESD46, latest issue, and to discontinue any product or service per JESD48, latest issue. Buyers should obtain the latest relevant information before placing orders and should verify that such information is current and complete.

TI's published terms of sale for semiconductor products (http://www.ti.com/sc/docs/stdterms.htm) apply to the sale of packaged integrated circuit products that TI has qualified and released to market. Additional terms may apply to the use or sale of other types of TI products and services.

Reproduction of significant portions of TI information in TI data sheets is permissible only if reproduction is without alteration and is accompanied by all associated warranties, conditions, limitations, and notices. TI is not responsible or liable for such reproduced documentation. Information of third parties may be subject to additional restrictions. Resale of TI products or services with statements different from or beyond the parameters stated by TI for that product or service voids all express and any implied warranties for the associated TI product or service and is an unfair and deceptive business practice. TI is not responsible or liable for any such statements.

Buyers and others who are developing systems that incorporate TI products (collectively, "Designers") understand and agree that Designers remain responsible for using their independent analysis, evaluation and judgment in designing their applications and that Designers have full and exclusive responsibility to assure the safety of Designers' applications and compliance of their applications (and of all TI products used in or for Designers' applications) with all applicable regulations, laws and other applicable requirements. Designer represents that, with respect to their applications, Designer has all the necessary expertise to create and implement safeguards that (1) anticipate dangerous consequences of failures, (2) monitor failures and their consequences, and (3) lessen the likelihood of failures that might cause harm and take appropriate actions. Designer agrees that prior to using or distributing any applications that include TI products, Designer will thoroughly test such applications and the functionality of such TI products as used in such applications.

TI's provision of technical, application or other design advice, quality characterization, reliability data or other services or information, including, but not limited to, reference designs and materials relating to evaluation modules, (collectively, "TI Resources") are intended to assist designers who are developing applications that incorporate TI products; by downloading, accessing or using TI Resources in any way, Designer (individually or, if Designer is acting on behalf of a company, Designer's company) agrees to use any particular TI Resource solely for this purpose and subject to the terms of this Notice.

TI's provision of TI Resources does not expand or otherwise alter TI's applicable published warranties or warranty disclaimers for TI products, and no additional obligations or liabilities arise from TI providing such TI Resources. TI reserves the right to make corrections, enhancements, improvements and other changes to its TI Resources. TI has not conducted any testing other than that specifically described in the published documentation for a particular TI Resource.

Designer is authorized to use, copy and modify any individual TI Resource only in connection with the development of applications that include the TI product(s) identified in such TI Resource. NO OTHER LICENSE, EXPRESS OR IMPLIED, BY ESTOPPEL OR OTHERWISE TO ANY OTHER TI INTELLECTUAL PROPERTY RIGHT, AND NO LICENSE TO ANY TECHNOLOGY OR INTELLECTUAL PROPERTY RIGHT OF TI OR ANY THIRD PARTY IS GRANTED HEREIN, including but not limited to any patent right, copyright, mask work right, or other intellectual property right relating to any combination, machine, or process in which TI products or services are used. Information regarding or referencing third-party products or services does not constitute a license to use such products or services, or a warranty or endorsement thereof. Use of TI Resources may require a license from a third party under the patents or other intellectual property of the third party, or a license from TI under the patents or other intellectual property of TI.

TI RESOURCES ARE PROVIDED "AS IS" AND WITH ALL FAULTS. TI DISCLAIMS ALL OTHER WARRANTIES OR REPRESENTATIONS, EXPRESS OR IMPLIED, REGARDING RESOURCES OR USE THEREOF, INCLUDING BUT NOT LIMITED TO ACCURACY OR COMPLETENESS, TITLE, ANY EPIDEMIC FAILURE WARRANTY AND ANY IMPLIED WARRANTIES OF MERCHANTABILITY, FITNESS FOR A PARTICULAR PURPOSE, AND NON-INFRINGEMENT OF ANY THIRD PARTY INTELLECTUAL PROPERTY RIGHTS. TI SHALL NOT BE LIABLE FOR AND SHALL NOT DEFEND OR INDEMNIFY DESIGNER AGAINST ANY CLAIM, INCLUDING BUT NOT LIMITED TO ANY INFRINGEMENT CLAIM THAT RELATES TO OR IS BASED ON ANY COMBINATION OF PRODUCTS EVEN IF DESCRIBED IN TI RESOURCES OR OTHERWISE. IN NO EVENT SHALL TI BE LIABLE FOR ANY ACTUAL, DIRECT, SPECIAL, COLLATERAL, INDIRECT, PUNITIVE, INCIDENTAL, CONSEQUENTIAL OR EXEMPLARY DAMAGES IN CONNECTION WITH OR ARISING OUT OF TI RESOURCES OR USE THEREOF, AND REGARDLESS OF WHETHER TI HAS BEEN ADVISED OF THE POSSIBILITY OF SUCH DAMAGES.

Unless TI has explicitly designated an individual product as meeting the requirements of a particular industry standard (e.g., ISO/TS 16949 and ISO 26262), TI is not responsible for any failure to meet such industry standard requirements.

Where TI specifically promotes products as facilitating functional safety or as compliant with industry functional safety standards, such products are intended to help enable customers to design and create their own applications that meet applicable functional safety standards and requirements. Using products in an application does not by itself establish any safety features in the application. Designers must ensure compliance with safety-related requirements and standards applicable to their applications. Designer may not use any TI products in life-critical medical equipment unless authorized officers of the parties have executed a special contract specifically governing such use. Life-critical medical equipment is medical equipment where failure of such equipment would cause serious bodily injury or death (e.g., life support, pacemakers, defibrillators, heart pumps, neurostimulators, and implantables). Such equipment includes, without limitation, all medical devices identified by the U.S. Food and Drug Administration as Class III devices and equivalent classifications outside the U.S.

TI may expressly designate certain products as completing a particular qualification (e.g., Q100, Military Grade, or Enhanced Product). Designers agree that it has the necessary expertise to select the product with the appropriate qualification designation for their applications and that proper product selection is at Designers' own risk. Designers are solely responsible for compliance with all legal and regulatory requirements in connection with such selection.

Designer will fully indemnify TI and its representatives against any damages, costs, losses, and/or liabilities arising out of Designer's non-compliance with the terms and provisions of this Notice.

Mailing Address: Texas Instruments, Post Office Box 655303, Dallas, Texas 75265
Copyright © 2017, Texas Instruments Incorporated